Stauff Filtration Delivers

Make Stauff your first choice for Fluid Cleanliness.

Get the performance you need to cut downtime and maintenance costs with the added benefit of the Stauff name, reputation and service.

Overview

- Pressure Filters
- Medium Pressure Filters SMPF
- Return-line Filters
- Low Pressure High Flow
  - Return-line Filters SRFL-S/D
- Spin-on Filters
- Stauff Filter Carts SCFC/SPFC
- RMF Filtration Systems
- Fluid Monitoring Systems
- Stauff Replacement Elements
- Stauff Accessories
- Stauff Tools
- Stauff Filtration Technology
- Service Capabilities
- Products

Products

- Pressure Filters
- Medium Pressure Filters
- Return Line Filters
- Spin-On Filters
- Stauff Filter Carts
- RMF Filtration Systems
- Fluid Monitoring Systems
- Stauff Replacement Elements

Trust Stauff for all your Hydraulic Filtration needs

STAUFF®

STAUFF®

FILTRATION TECHNOLOGY

Response & Flexibility

Competitive Service

Prompt Delivery

STAUFF Filtration Technology

Stauff Filtration Technology offers a complete range of filtration products and services that will provide the system designer or user with the highest level of contamination control demanded by today's most sophisticated applications. Products include pressure filters, return line filters, elements, spin on filters, suction strainers, and filler breathers for various hydraulic, lubrication and fuel oils.

Stauff has the technical expertise to provide superior filter element designs for the Stauff original filter housings and also for the interchange element market. Stauff manufactures more than 10,000 different elements. Many of these are designed to fit into filter housings produced by other companies while maintaining or surpassing the original performance.

The "Stauff Contamination Control Program" includes the diagnostic services including fluid sampling and laser particle counting products needed to monitor the system contamination level.

Stauff, through its global network of wholly owned companies and technically qualified distributors, is ideally placed to assist its customers in the total contamination control process providing a well balanced filtration solution.

Service Capabilities

- 24 hour turn around on all standard stock element orders
- 48 hour turn around on all assembled filter assembly orders
- Rush orders placed by 4:00PM will ship the same day
- Private Label Element Printing
- Spin On Filter silk screening
- Special Packaging

Products

- Wider range of interchange elements:
  - ARGO
  - DONALDSON
  - EPPENSTEINER
  - FAIREY ARLON
  - HYDAC/HYCON
  - HY-PRO
  - INTERNORMEN
  - LHA
  - MAHLE-PUROLATER
  - MOOG
  - MP FILTRI
  - PALL
  - PARKER
  - SEPARATION TECHNOLOGIES
  - VICKERS
  - ZINGA
- STAUFF Laser Particle Counter
- Oil Analysis Service, STFC-10
- Desiccant Breathers, SDB Series
- Custom Element Manufacturing
- Custom Flitration Systems
- Filter Carts

THIS IS STAUFF

RESPONSE AND FLEXIBILITY · COMPETENT SERVICE · PROMPT DELIVERY · ENSURED QUALITY · FRIENDLY SERVICE · PROVEN IN PRACTICE

Australia
Stauff Corporation (Pty.) Ltd.
P.O.Box 227, 24-26 Doyle Avenue,
Unanderra Wollongong , N.S.W
2526 AUSTRALIA
Tel: +61 2 42 71 18 77
Fax: +61 2 42 71 84 32

Brazil
Stauff Brasil Ltda.
Av. Gupê 10767
Galpão 2 – Bloco A
Barueri – São Paulo – CEP 06422-120, BRAZIL
Tel: +55 (0)11-4789-9020
Fax: +55 (0)11-4789-9021

Canada
Stauff Canada Ltd.
866 Milner Avenue
Scarborough , Ontário M1B 5N7 , CANADA
Tel: +1 416 282 46 08
Fax: +1 416 282 30 39

China
Stauff International Trading (Shangai) Co., Ltd.
Shangdian Mansion, Pudong
331, Binzhou Road
200126 Shangai, CHINA
Tel: +86 21 58 45 65 60
Fax: +86 21 58 45 66 80

France
Stauff S.A.
Z.I. de Vineuil-Blois Sud
230, Avenue du Grain d'Or
41354 Vineuil-cedex, FRANCE
Tel: +33 2 54 50 55 50
Fax: +33 2 54 42 29 19

Germany
Walter Stauffenberg GmbH & Co. KG
P.O. Box 1745,
D-58777 Werdohl, GERMANY
Tel: +49 (0) 23 92/916-0
Fax: +49 (0) 23 92 25 05

India
Stauff India Pvt. Ltd.
Gat. No. 2340
Pune-Nagar Road, Wagholi
IND-Pune - 412207
Tel: +91 20 705 19 90
Fax: +91 20 705 19 89

Italy
Stauff Italia S.R.L.
Via Pola 21/23
I-20034 Birone di Giussano
Tel: +39 0362 31 21 13
Fax: +39 0362 33 55 36

New Zealand
Stauff Corporation (NZ) Ltd.
Unit J. 150 Harris Road, P.O. Box 58517
Greenmount Auckland-NEW ZEALAND
Tel: +64 9 271 4812
Fax: +64 9 271 4832

United Kingdom
Stauff UK Ltd.
332, Coleford Road Darnall
Sheffield, S 9 5 P H, ENGLAND
Tel: +44 1142 518 518
Fax: +44 1142 518 519

USA
Stauff Corporation
7 Wm. Demarest Place
Waldwick, NJ – 07463, USA
Tel: +1 201 444 78 00
Fax: +1 201 444 78 52

Globally available through distributors in all industrial countries

KLD&DMP

www.stauff.com

Ordering Code # : SFT - 2004 - CPC - US

STAUFF®

2003 STAUFF

2003 STAUFF

STAUFF®

FILTRATION TECHNOLOGY

Complete Program

Quality and Service Worldwide

Pressure Filters SF

Stauff high pressure filters are designed for the most demanding applications. They come in a variety of sizes, configurations and with numerous porting options.

- pressures to 420 bar *(6000 PSI)*
- flows to 600 l/min *(160 US GPM)*
- BSP, NPT, SAE “O”-ring or SAE Code 62 flange ports
- head and bowl spheroidal graphite cast iron
- wide range of valve options
- various element types and media available
- standard bowls or top-loading bowls available
- mechanical and electric indicators

Pressure Filters SIF

Designed to meet the North American automotive specs the Stauff SIF48 series of filters meet the HF4 standard.
Available with 3 bowl lengths, using modular stackable elements. The compact in-line design facilitates easy installation and element changes.

- pressure up to 345 bar *(3045 PSI)*
- flows up to 380 l/min *(100 US GPM)*
- SAE “O”-ring (standard), NPT, SAE Code 61 flange, sub-plate or BSP ports
- various electrical and visual indicators

Medium Pressure Filters SMPF

Designed for applications in the machine tool industry. Their aluminum light weight compact design allows easy installation. As with all Stauff filters a wide range of options are available.

- pressure up to 110 bar *(1600 PSI)*
- flows up to 90 l/min *(25 US GPM)*
- BSP, SAE “O”-ring ports
- head and bowl aluminum alloy
- manual mechanical and electric automatic indicators

Return-line Filters RF-RTF

Stauff return-line filters are designed as tank top filters. Their practical design allows easy element replacement and quick installation. A wide range of media is available for the RF-RTF element series.

- pressure up to 16 bar *(232 PSI)*
- flows up to 500 l/min *(130 US GPM)*
- BSP, SAE “O”-ring and SAE Code 61 flange ports
- head aluminum alloy, bowl glass fibre reinforced PA
- mechanical and electric indicators

Return-line Filters RIF48

Stauff RIF48 series filters are designed as in-line return filters. They comply with the HF4 automotive standards. Their practical design allows easy element replacement and quick installation.

- pressure up to 20 bar *(300 PSI)*
- flows up to 380 l/min *(100 US GPM)*
- BSP, SAE “O”-ring and SAE Code 61 flange ports
- head die-cast aluminum, bowl steel
- manual mechanical and electric automatic indicators

Low Pressure High Flow Return-line filters SRFL-S/D

The SRFL series of return-line filters are designed to handle large flows in any industrial hydraulic or lubrication system. Special configurations are also available for process applications.

- pressures up to 14 bar *(206 PSI)*
- flows up to 6600 l/min *(1750 US GPM)*
- ANSI, SAE and DIN flanged ports
- housing carbon steel standard. Stainless available.
- mechanical and electric indicators

Spin-on Filters

Stauff manufacturers a wide range of high and low pressure spin-on filters. A variety of filter head, element and indicator options are available. Both North American as well as European spin-on elements are available from stock.

- pressure to 40 bar *(600 PSI)*
- flows to 460 l/min *(120 US GPM)*
- BSP, NPT, SAE “O”-ring or SAE Code 61 flange ports
- heads die-cast aluminum
- mechanical and electric indicators
- a wide range of media types and seal options
- European and North American elements in stock

RMF Filtration Systems

The Stauff RMF Off Line Filtration Systems are designed to keep hydraulic and lubrication systems free of particle and water contamination. The systems are available in a by-pass design for mobile applications, and an off-line version complete with an integral pump and motor for industrial applications.

- depth Filtration
- 280 layers of filter media
- 0.5 micron filtration
- extremely high efficiency, ß2=2331
- high dirt holding capacity, 12g ACFTD
- high water holding capacity 0.12 l *(4 oz)*
- radial flow, no channel forming
- off-line design for easy installation
- BP units for mobile applications
- OL units for industrial applications

Stauff Filter Carts SCFC / SPFC

Stauff manufacturers a complete range of filtration carts. Compact in design and easy to operate these carts are essential tools to transfer new oil, or to be used as an off-line filter in support of the standard in line filtration systems.

- flows up to 40 l/min *(10 US GPM)*
- internal high quality gear pump
- IEC/CSA/NEMA electric motors for any voltage/frequency
- wide range of spin-on elements available for absolute filtration, water absorbtion, mesh strainers etc.
- compact practical and rigid design
- high quality framework phospated and oven epoxy coated

Stauff Replacement Elements

The Stauff replacement element program includes relpacement elements for over 200,000 part numbers covering more than 50 different brands of filter elements. The majority of these are available from stock.

- state-of-the-art laboratories and production facilities for element manufacturing
- stringent quality and production control
- high quality media (4-pro)
- all major brands available in Stauff replacements
- large stock availability

Fluid Monitoring Systems

Stauff manufacturers a comprehensive line of fluid monitoring systems from pressure analysis to particle counting. From simple analog diagnostic systems to complex sophisticated digital diagnostic systems, Stauff is your first choice.

- pressure gauge kits (analog)
- diagnostic test points and hoses (Stauff-Test)
- digital pressure gauges (SPG-DIGI)
- Stauff Pressure Transmitters (SPT)
- digital monitoring units (PPC series) for flow, pressure, RPM and temperature – from simple (PPC04) to sophisticated (PPC12)
- laser particle counting units for laboratory and field use (LasPaCI) and in-line particle monitors for high-tech in-line and on-line particle monitoring (LPMI)
- Stauff–Check web based reporting for complete laboratory analysis on hydraulic and lubrication fluids. Unique trend-monitoring service available

Stauff Accessories

Stauff manufacturers one of the largest lines of hydraulic accessories in the world. We are the number one choice for any manufacturer in need of hydraulic accessories. Our line includes:

- Stauff Clamps – hydraulic tube and hose supports for secure installation of tubing for diameters from 3mm *(1/8”)* up to 1000mm *(40”)*
- Stauff Test – diagnostic test points and hose for a wide range of applications in fluids and gases.
- Stauff Diagnostic – diagnostic test equipment for pressure, flow, temperature, RPM’s and particle counting
- Stauff Accessories – a complete range of filler breathers, suction strainers, level gauges, flanges, and reservoir accessories

Stauff Tools

Stauff has a wide range of training tools and software to support the proper applcation of filtration systems and products. Software includes filter sizing programs as well as training presentations. Contact your local Stauff representative for more information.

Pressure Filters

Stauff offers a complete range of filters for specific applications in a variety of sizes, configurations and porting options.

PRESSURE FILTERS SF

(6000 PSI—Heavy Duty)

PRESSURE FILTERS SIF

(5000 PSI—Automotive Spec)

Medium Pressure Filters

Stauff offers a complete range of filters for specific applications in a variety of sizes, configurations and porting options.

MEDIUM PRESSURE FILTERS SMPF

(1600 PSI Machine Tool Applications)

STAUFF®

STAUFF®

FILTRATION TECHNOLOGY

2003

STAUFF

Pressure Filters SF

Quality and Service
Worldwide

Australia
Stauff Corporation (Pty.) Ltd.
P.O.Box 227 , 24-26 Doyle Avenue,
Unanderra Wollongong , N.S.W
2526 AUSTRALIA
Tel: +61 2 42 71 18 77
Fax: +61 2 42 71 84 32

Brazil
Stauff Brasil Ltda.
Av. Gupê 10767
Galpão 2 – Bloco A
Barueri – São Paulo – CEP 06422-120, BRAZIL
Tel: +55 (0)11-4789-9020
Fax: +55 (0)11-4789-9021

Canada
Stauff Canada Ltd.
866 Milner Avenue
Scarborough , Ontário M1B 5N7 , CANADA
Tel: +1 416 282 46 08
Fax: +1 416 282 30 39

China
Stauff International Trading (Shangai) Co., Ltd.
Shangdian Mansion, Pudong
331 , Binzhou Road
200126 Shangai, CHINA
Tel: +86 21 58 45 65 60
Fax: +86 21 58 45 66 80

France
Stauff S.A.
Z.I. de Vineuil-Blois Sud
230, Avenue du Grain d'Or
41354 Vineuil-cedex, FRANCE
Tel: +33 2 54 50 55 50
Fax: +33 2 54 42 29 19

India
Stauff India Pvt. Ltd.
Gat. No. 2340,
Pune-Nagar Road, Wagholi, INDIA
IND-Pune - 412027
Tel: +91 20 705 19 90
Fax: +91 20 705 19 89

Italy
Stauff Italia S.R.L.
Via Pola 21/23, I-20034
Birone di Giussano, ITALY
Tel: +39 0362 31 21 13
Fax: +39 0362 33 55 36

New Zealand
Stauff Corporation (NZ) Ltd.
Unit J. 150 Harris Road, P.O. Box 58517
Greenmount Auckland-NEW ZEALAND
Tel: +64 9 271 4812
Fax: +64 9 271 4832

United Kingdom
Stauff UK Ltd.
332, Coleford Road Darnall
Sheffield, S 9 5 P H, ENGLAND
Tel: +44 1142 518 518
Fax: +44 1142 518 519

USA
Stauff Corporation
7 Wm. Demarest Place
Waldwick, NJ – 07463, USA
Tel: +1 201 444 78 00
Fax: +1 201 444 78 52

Distributors and warehouses in all industrial countries.

Walter Stauffenberg GmbH & Co. KG

P. O. Box 1745 · D-58777 Werdohl
Im Ehrenfeld 4 · D-58791 Werdohl
Tel.: +49 (0) 2392 916-0
Fax: +49 (0) 2392 2505
E-mail: sales@stauff.com
Internet: http://www.stauff.com

Stauff Filtration Technology

Stauff Filtration Technology offers a complete range of filtration products and services that will provide the system designer or user with the highest level of contamination control demanded by today's most sophisticated applications. Products include pressure filters, return line filters, elements, spin on filters suction strainers, and filler breathers for various hydraulic, lubrication and fuel oils.

Stauff has the technical expertise to provide superior filter element designs for the Stauff original filter housings and also for the interchange element market. Stauff manufactures more than 10,000 different elements. Many of these are designed to fit into filter housings produced by other companies while maintaining or surpassing the original performance.

The "Stauff Contamination Control Program" includes the diagnostic services including fluid sampling and laser particle counting products needed to monitor the system contamination level.

Stauff, through its global network of wholly owned companies and technically qualified distributors, is ideally placed to assist its customers in the total contamination process providing a well balanced filtration solution.

Pressure Filter SF

Technical Data

STAUFF high pressure filters are designed for in-line hydraulic applications, with a maximum operating pressure of 420 bar *(6000 PSI)*. Used together with STAUFF filter elements, a high efficiency of contaminant removal is assured. The high dirt holding capacity of the elements ensures long service life and, as a result, reduced maintenance costs.

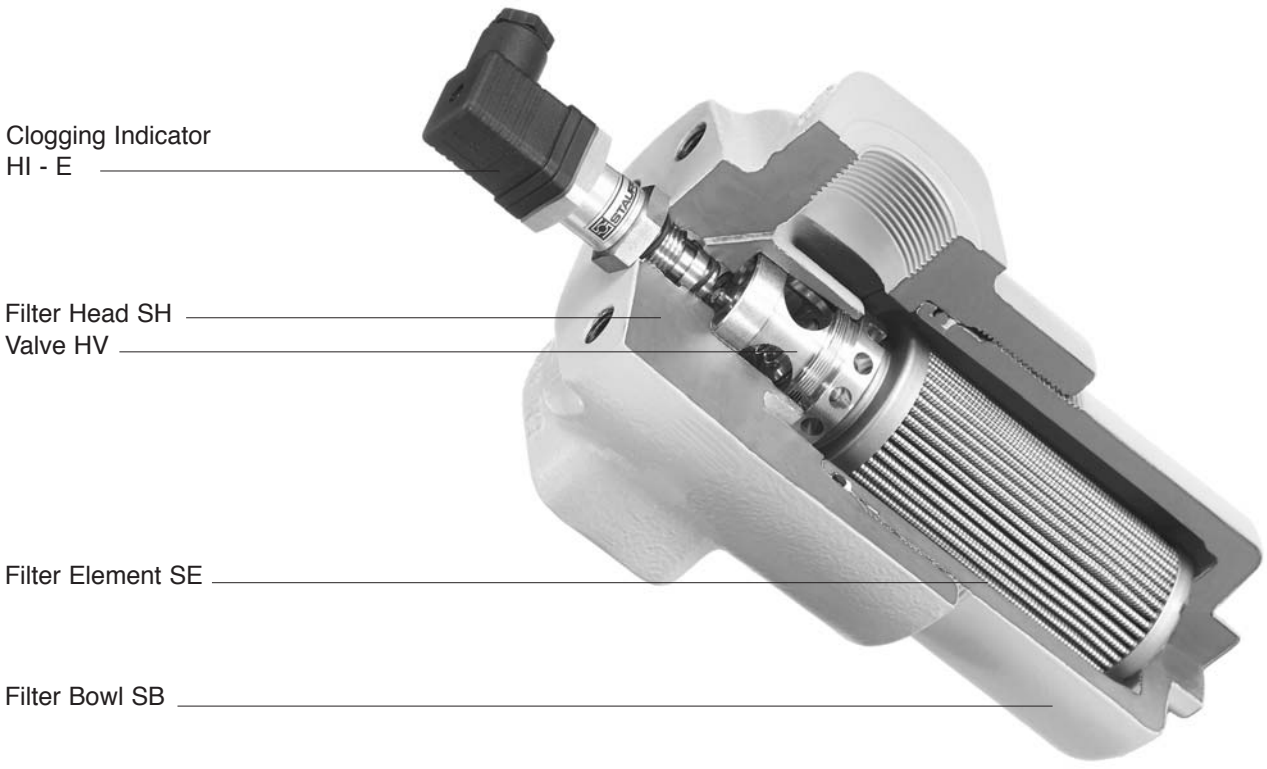

Technical Specification

Construction	In-line assembly, with threaded mounting holes on top of head
Filter head	Spheroidal graphite cast iron
Filter bowl	Cold drawn steel
Seals	O-Rings NBR (Buna-N®) FPM (Viton®) EPDM (Ethylene-propylene), support ring PTFE
Port connections	BSP, NPT, SAE “O”-Ring thread or SAE Code 62 flange
Operating pressure	max 420 bar *(6000 PSI)*
Proof pressure	630 bar *(9100 PSI)*
Burst pressure	>1260 bar *(18250 PSI)*
Temperature range	-10°C up to +100°C *(14°F up to 212°F)*
By-pass valve	Allows unfiltered oil to by-pass the contaminated element once the opening pressure has been reached
Reverse flow valve	Allows reverse flow through the filter head without backflushing the element
Non-return valve	Prevents draining of the delivery line during element change
Multi-function valve	Forward by-pass, reverse flow capability, and non return valve opening pressure 6 $^{+0,5}$ bar (*87* $^{+7,25}$ *PSI*) Δp all in one valve
Clogging indicators	standard actuating pressure 5 $_{-0,5}$ bar (72 $_{-7,25}$ *PSI*)Δp execution indicators: visual, electrical and visual-electrical (24 V, 110 V, 220 V versions) other actuating pressures on request
Filter elements	Specifications see page 9
Media	Mineral oils, other fluids on request

Pressure Filter SF Dimensions

Dimensions

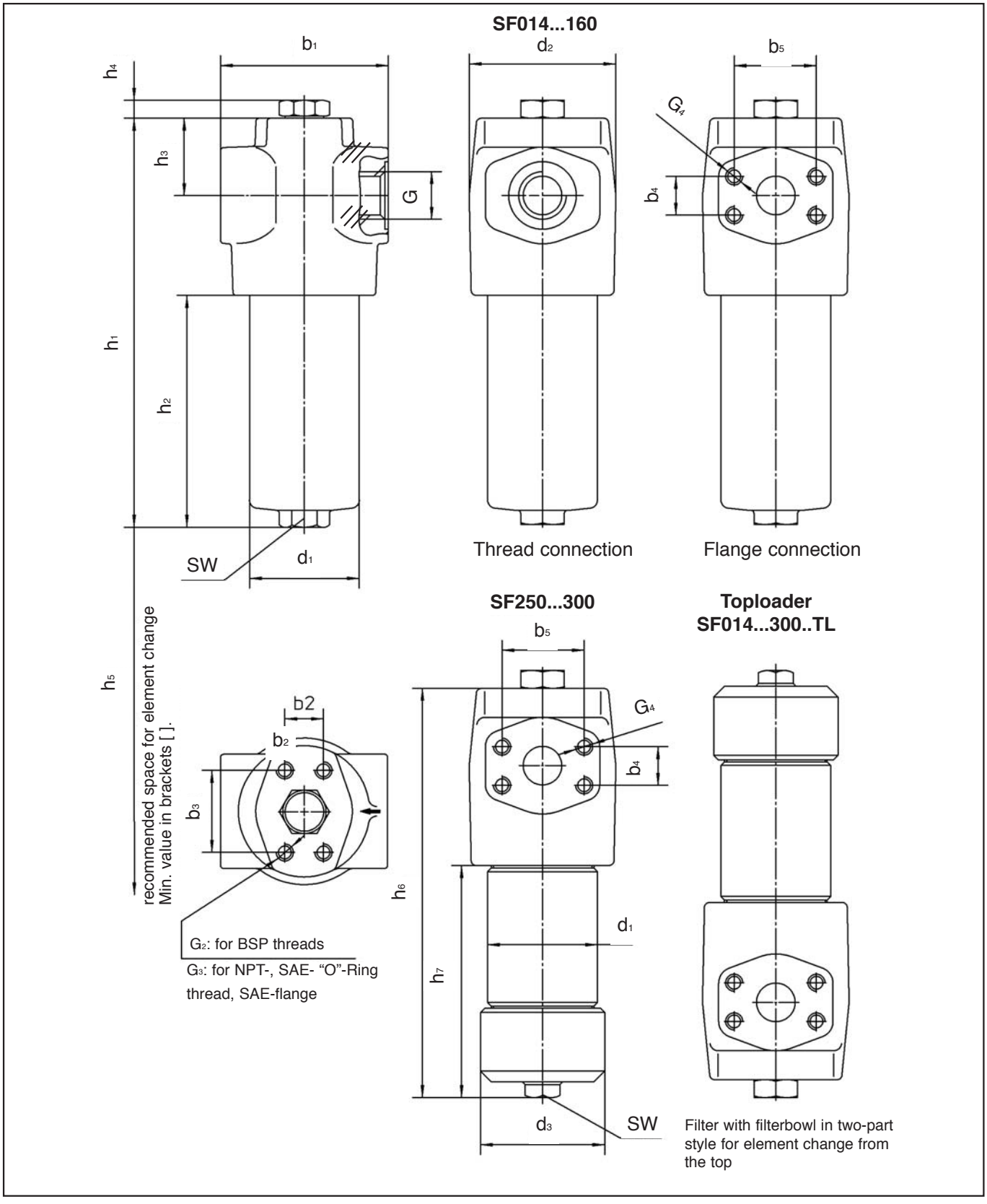

Dimensions in mm (inch)

NEXT

Pressure Filter SF Dimensions

Dimensions

Filter Size	Thread connection G				Weight including elements			
	BSP	NPT	SAE- "O"-Ring thread	SAE - flange *6000 PSI*	with bowl in one-part style		with bowl in two-part style	
					kg	*lbs*	kg	*lbs*
SF014	G 3/4	3/4"	1 1/16-12 UN	3/4"	5,3	*11,7*	5,9	*13*
SF030					6,2	*13,7*	6,9	*15,2*
SF045	G 1 1/4	1 1/4"	1 5/8-12 UN	1 1/4"	10,3	*22,7*	12,2	*26,9*
SF070					12	*26,5*	13,7	*30,2*
SF125					16,3	*35,9*	20	*44,1*
SF090	G 1 1/2	1 1/2"	1 7/8-12 UN	1 1/2"	27	*59,9*	32	*70,5*
SF160					35,5	*78,3*	39,3	*86,5*
SF250					-	-	49	*108*
SF300					-	-	57,3	*126,3*

Filter Size	Dimensions														
					with filterbowl in one-part style Type SF					with filterbowl in two-part style Type SF...-TL					
	b_1	d_2	h_3	h_4	d_1	h_1	h_2	h_5	SW	d_1	d_3	h_6	h_7	h_5	SW
SF014	104 *(4,095)*	83 *(3,268)*	48 *(1,89)*	12,5 *(0,492)*	68 *(2,677)*	188 *(7,402)*	78 *(3,071)*	100 [85] *(3,937 [3,347])*	27 *(1,063)*	70 *(2,756)*	84 *(3,307)*	190 *(7,48)*	80 *(3,15)*	65 *(2,559)*	27 *(1,063)*
SF030						254 *(10)*	144 *(5,670)*	170 [85] *(6,693 [3,347])*				256 *(10,079)*	146 *(5,748)*	130 *(5,118)*	
SF045	140 *(5,512)*	116 *(4,567)*	49,5 *(1,949)*		95 *(3,740)*	239 *(9,409)*	103 *(4,055)*	140 [120] *(5,512 [4,724])*	32 *(1,26)*	101,6 *(4)*	115 *(4,528)*	241 *(9,488)*	103 *(4,055)*	100 *(3,937)*	32 *(1,26)*
SF070						298 *(11,732)*	161 *(6,339)*	200 [120] *(7,874 [4,724])*				300 *(11,811)*	163 *(6,417)*	160 *(6,299)*	
SF125						483 *(19,106)*	343 *(13,504)*	380 [120] *(14,961 [4,724])*				485 *(19,095)*	344 *(13,543)*	340 *(13,386)*	
SF090	178 *(7,008)*	159 *(6,260)*	72 *(2,835)*		130 *(5,118)*	323 *(12,717)*	148 *(5,827)*	190 [150] *(7,48 [5,906])*	36 *(1,417)*	133 *(5,236)*	155 *(6,102)*	329,5 *(12,972)*	154,5 *(6,083)*	120 *(4,724)*	36 *(1,417)*
SF160						494 *(19,449)*	319 *(12,559)*	360 [150] *(14,173 [5,906])*				500,5 *(19,705)*	325,5 *(12,815)*	290 *(11,417)*	
SF250						not available						656,5 *(25,847)*	481,5 *(18,957)*	425 *(16,732)*	
SF300						not available						821,5 *(32,343)*	646,5 *(25,453)*	590 *(23,228)*	

Filter Size	Dimensions Mounting Flange								Dimensions SAE-Flange *6000 PSI*		
	New Standard Style (for new engineering/constructions) TH				Old Style (running out, not for new engineering/constructions) T						
	b_2	b_3	G_2	G_3	b_2	b_3	G_2	G_3	b_4	b_5	G_4
SF014	32 *(1,26)*	56 *(2,205)*	M6x9	1/4 - 28 UNF x 0.354	23,8 *(0,937)*	50,8 *(2)*	M10x15	3/8 -16 UNC x 0.591	23,8 *(0,937)*	50,8 *(2)*	3/8-16 UNC
SF030											
SF045	35 *(1,244)*	85 *(2,626)*	M10x15	3/8 - 24 UNF x 0.591	31,6 *(1,378)*	66,7 *(3,347)*	M14x20	1/2-13 UNC x 0.787	31,6 *(1,244)*	66,7 *(2,626)*	1/2-13 UNC
SF070											
SF125											
SF090	60 *(1,445)*	115 *(3,126)*	M12x20	1/2 - 20 UNF x 0.787	36,7 *(2,362)*	79,4 *(4,528)*	M16x20	5/8-11 UNC x 0.787	36,7 *(1,445)*	79,4 *(3,126)*	5/8-11 UNC
SF160											
SF250											
SF300											

Dimensions in mm *(inch)*

Valves

The optional valves are fitted as an insert in the filter head and incorporate the spigot on which the element seals. The valve is selected to suit the filter application.

HV-O **Non-by-pass standard insert** without any valve function. Element collapse rating should be higher than system pressure

HV-B **By-pass valve** which allows oil to bypass the element when the differential pressure across the element reaches $6^{+0,5}$bar *($87^{+7,25}$ PSI)*. (Other pressure settings available on request). The opening pressure should be higher than the Δp setting of an optional clogging indicator. Low collapse (30 bar / *435 PSI* Δp) elements are normally used with this valve.

HV–R **Reverse flow valve** is used in systems where there is flow in reverse through the filter. It allows reverse flow without back-flushing the element but does not filter in the reverse direction. High collapse elements (210 bar / *3045 PSI* Δp) are normally used with this valve.

HV-N **Non-return valve**
This valve prevents the oil in the delivery line from draining out while the filter is being serviced. Because there is no by-pass, the element collapse rating should be higher than system pressure.

HV-M **Multi-function valve**
This valve combines the by-pass, the reverse flow and the non-return functions in one unit. The by-pass opening pressure is $6^{+0,5}$ bar / $87^{+7,25}$ *PSI* Δp with other opening pressures available on request. The opening pressure should be higher than the Δp setting of an optional clogging indicator.

HV – M 014/030 /X

Valves

Code	Valve type
O	Non-bypass standard insert without any valve
B	By-pass Valve
R	Reverse Flow Valve
N	Non Return Valve
M	Multi-Function Valve

Design Code
only for information

Filter Group
014/030
045/070/125
090/160/250/300

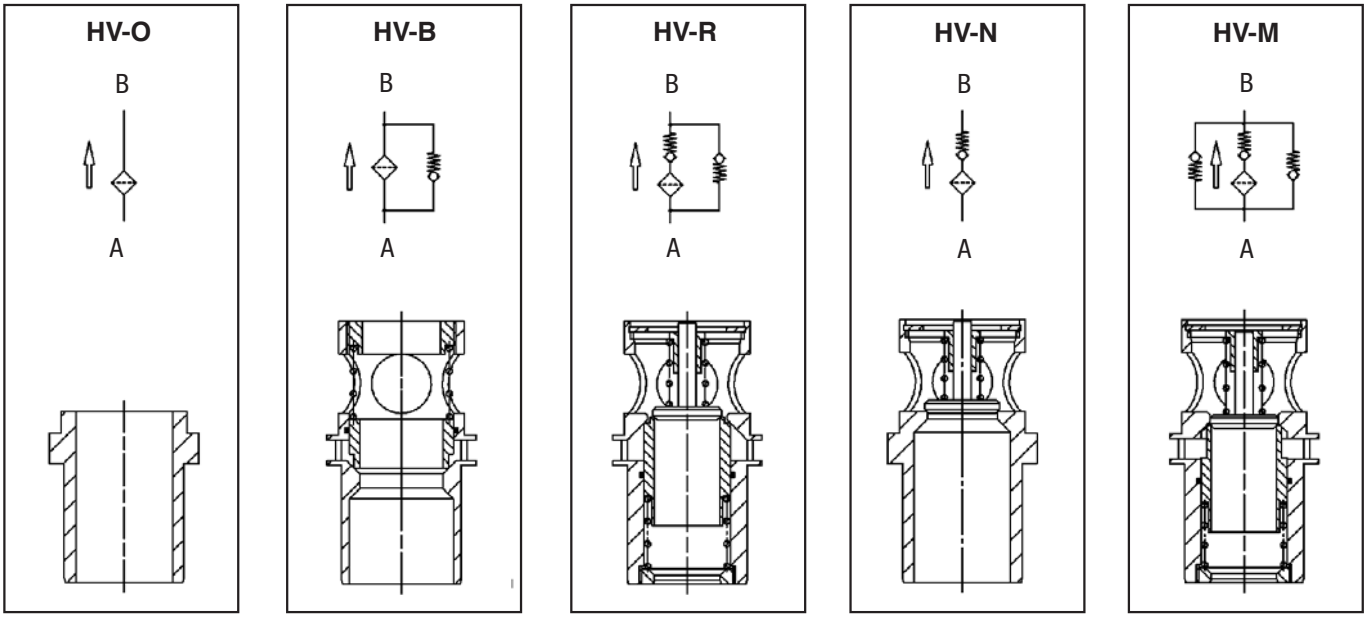

Flow characteristics of the valves see page 10

Clogging Indicators

STAUFF pressure filters have a range of clogging indicators available. If no indicator is specified, the port is sealed by a plug (HI-O). The clogging indicators are actuated by the differential pressure (Δp) across the element. The special piston design minimizes the effects of peak pressures in the system. An optional thermostatic lockout (thermo-stop) is available to prevent false indication under cold start conditions. Fluid temperature must be at least 20°C *(68°F)* for the indicator to function.

Technical Specification

Body	Stainless steel
Seals	NBR (Buna-N®), FPM (Viton®), EPDM Seal 18,5x23,9x2 *(0,728x 0,941x 0,079)* O-Ring 15,5x1,5 *(0,61x0,059)*
Thread	1/2" BSP
Differential pressure setting	$5_{-0,5}$ bar *($72_{-7,25}$ PSI)* (other settings on request)
Electrical	Standard DIN appliance plug, Screwed cable gland PG11, protection rating (DIN40050) IP65, both NO and NC contacts are available in the switch, rated capacity: see chart

The visual clogging indicators are available in the following configurations :

Manual reset	The indicator continues to display the clogged signal even through the Δp may have fallen. Pressing the plastic cover down will reset the indicator.
Automatic reset	The clogged signal will disappear when the Δp drops below the setting for the indicator.

Electrical and visual-electrical clogging indicators are only available with automatic reset.

HI – P T 220 B - 5,0B /X

Clogging Indicator

Code	Execution
O	plug
A	visual, automatic reset
V	visual, manual reset
E	electrical
P	visual-electrical

Thermostop	
	without Thermostop
T	with Thermostop

Voltage (only for Code P)	
24	24 V
110	110 V
220	220 V

Design Code

only for information

Differential pressure setting	
25P	*25 PSI* (1,72 bar)
2,0B	2,0 bar *(29 PSI)*
3,0B	3,0 bar *(43,5 PSI)*
5,0B	5,0 bar *(72,5 PSI)* (Standard)
7,0B	7,0 bar *(101,5 PSI)*

others on request

Sealing Material	
B	NBR (Buna®)
V	FPM (Viton®)
E	EPDM

HI-O

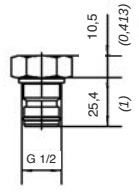

HI-A
HI-A

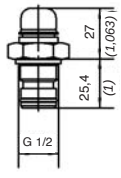

HI-E

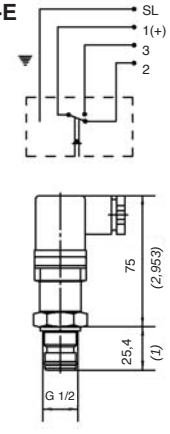

HI-P

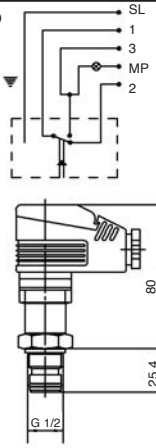

Rated Capacity HI-E and HI-P

Alternating current
250V AC 5 Amps

Direct current:
see table below

Voltage V	Resistive Load Amps	Inductive Load Amps
24	8,00	7,00
110	0,50	0,20
220	0,25	0,10

N.B. High voltage peaks occur when inductive loads are switched off. Protective circuitry should be employed to reduce contact burnout.

Pressure Filter SF Ordering Code

Ordering Code Filter Housings

SF 014 ... V – TH B / B / PT 220 / TL /2

Filter type	SF

Group		
Size	Flow *	
	l/min	GPM
014	60	14
030	110	30
045	160	45
070	240	70
090	330	90
125	440	125
160	660	160
250	990	250
300	1320	300

Note: Exact flow will depend on filter element selected. Consult Technical data on page 10 & 11

for complete filters:
identification filter material
+ micron rating code
(see ordering code filter elements below)

Seal material	
B	NBR (Buna®)
V	FPM (Viton®)
E	EPDM

other seal materials on request

Connecting Flange	
TH	Type T (new standard)
(T)	*Type T*

see table page 5
dimensions connecting flange
Type T is running out, please use only type TH for new engineering/constructions

Design Code
only for information

Style filterbowl	
	with bowl in one-part style
TL	Toploader. with bowl in two-part style

Voltage (only for code P)	
24	24 V
110	110 V
220	220 V

Thermostop	
	without Thermostop
T	with Thermostop

Clogging indicator	
	without clogging indicator
A	visual, with autom. reset
V	visual, with manual reset
E	electrical
P	visual-electrical

Valve	
O	without valve
B	By-pass valve
R	Reverse flow valve
N	Non return valve
M	Multi-function valve

Connection style		Group								
Code	Connection style	014	030	045	070	125	090	160	250	300
B	BSP	G3/4		G1 1/4			G1 1/2			
B1	BSP	G1		G1 1/2			-			
N	NPT	3/4"		1 1/4"			1 1/2"			
U	SAE-"O"-Ring thread	1 1/16 – 12		1 5/8 – 12			1 7/8 – 12			
F	SAE-flange *(3000 PSI)*	3/4"		1 1/4"			1 1/2"			
F1	SAE-flange *(3000 PSI)*	1"		-			2"			
G	SAE-flange *(6000 PSI)*	3/4"		1 1/4"			1 1/2"			

Other port connections on request. Flanges do not belong to the scope of supply!

Ordering Code Filter Elements

SE-014 G 10 V /X

Series	SE

Group
according to filter housing

Filter material			Micron ratings available
Code	Material	max $\Delta p^*_{collapse}$	
A	Stainless fiber	210 bar *(3045 PSI)*	03, 05, 10, 20
C	Polyester fiber	210 bar *(3045 PSI)*	
N	Filterpaper	30 bar *(435 PSI)*	
G	Inorganic glass fiber	30 bar *(435 PSI)*	
H	Inorganic glass fiber	210 bar *(3045 PSI)*	
B, **S**	Stainless mesh	30 bar *(435 PSI)*	10, 25, 40, 60, 100
T, **W**	Stainless mesh	210 bar *(3045 PSI)*	

*collapse / burst resistance as per ISO 2941

Bold type identifies preferred material

Design Code
only for information

Seal material	
B	NBR (Buna®)
V	FPM (Viton®)
E	EPDM

other seal materials on request

Micron rating	
03	3 µm
05	5 µm
10	10 µm
20	20 µm
25	25 µm
40	40 µm
60	60 µm
100	100 µm
200	200 µm
500	500 µm

other micron ratings on request

Replacement Filter Elements for SF Series

STAUFF replacement filter elements for SF series filters are manufactured in the common filter materials such as stainless fiber, stainless mesh, paper and inorganic glass fiber. As standard all replacement elements series SF have tin plated steel parts for use with aggressive media such as water glycol, other materials available on request. All STAUFF replacement elements comply with quality specifications in accordance with international standards.

SE-014 G 10 V /X

Series	SE

Group
according to filter housing

Design Code
only for information

Seal material	
B	NBR (Buna®)
V	FPM (Viton®)
E	EPDM
other seal materials on request	

Filter material			Micron ratings available
Code	**Material**	**max Δp*collapse**	
A	Stainless fiber	210 bar *(3045 PSI)*	03, 05, 10, 20
C	Polyester fiber	210 bar *(3045 PSI)*	
N	Filterpaper	30 bar *(435 PSI)*	
G	Inorganic glass fiber	30 bar *(435 PSI)*	
H	Inorganic glass fiber	210 bar *(3045 PSI)*	
B, **S**	Stainless mesh	30 bar *(435 PSI)*	10, 25, 40, 60, 100
T, **W**	Stainless mesh	210 bar *(3045 PSI)*	

*collapse / burst resistance as per ISO 2941

Bold type identifies preferred material

Micron rating	
03	3 µm
05	5 µm
10	10 µm
20	20 µm
25	25 µm
40	40 µm
60	60 µm
100	100 µm
200	200 µm
500	500 µm
other micron ratings on request	

Flow Characteristics of Pressure Filters

The following characteristics are valid for mineral oils with a density of 0,85 kg/dm³ and the kinematic viscosity of 30 mm²/s. The characteristics have been determined in accordance to ISO 3968.

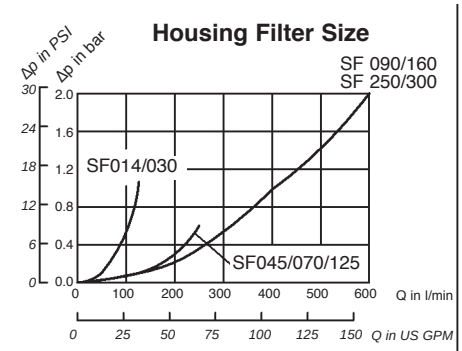

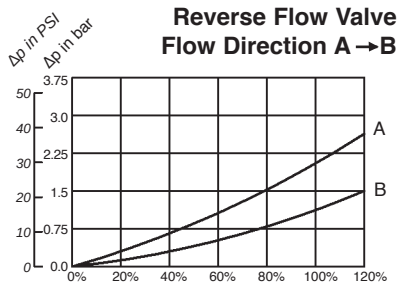

Q as a percentage of the nominal flow

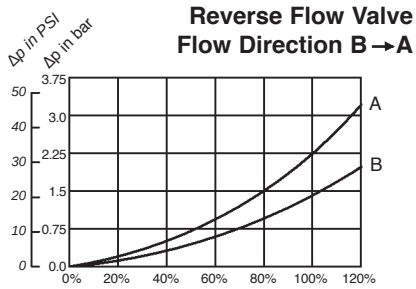

Q as a percentage of the nominal flow

A= Filter Size SF 030/070/125/160/250/300 B= Filter Size SF 014/045/090

Characteristics of the multi-function valve are approximately 15% higher than those of the reverse flow valve

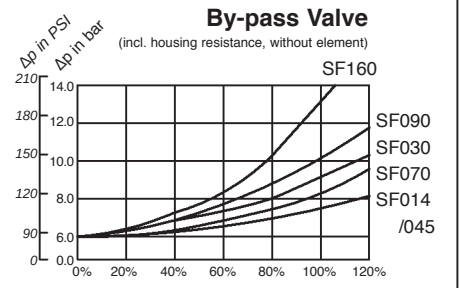

Characteristics of the multi-function valve are approximately 5% higher than those of the by-pass valve.

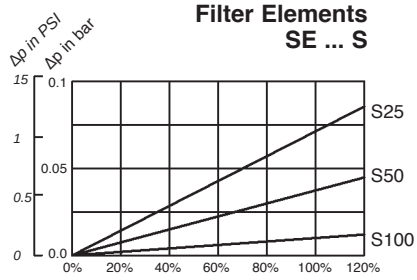

Q as a percentage of the nominal flow

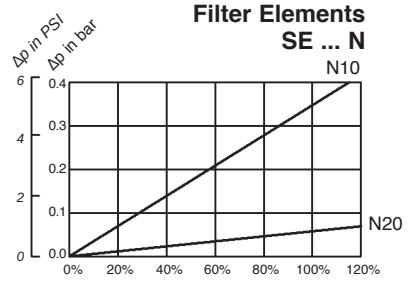

Q as a percentage of the nominal flow

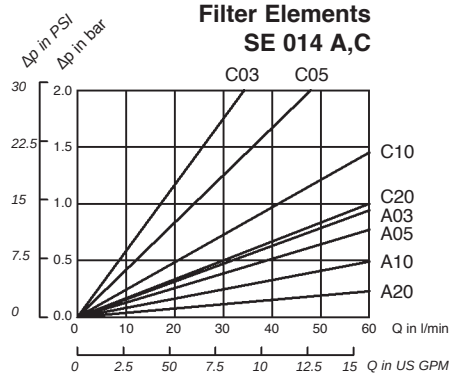

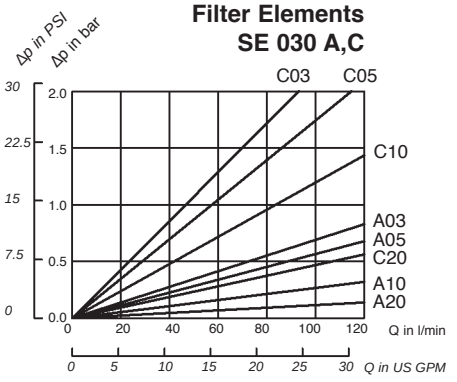

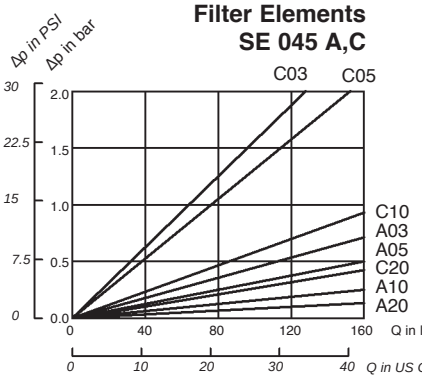

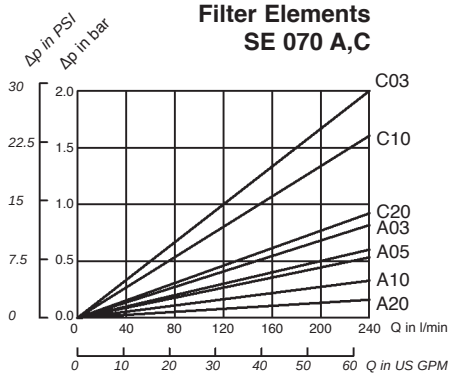

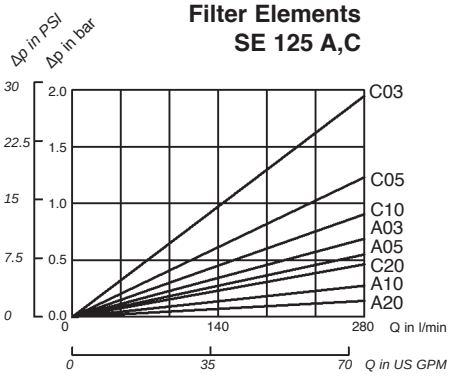

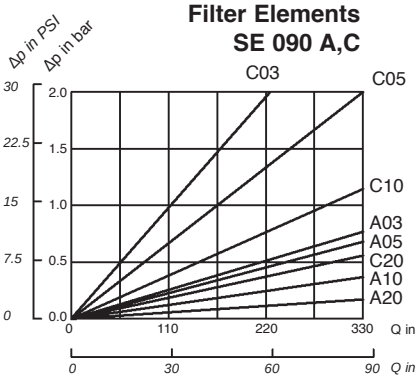

Flow Characteristics of Pressure Filters

The following characteristics are valid for mineral oils with a density of 0,85 kg/dm³ and the kinematic viscosity of 30 mm²/s. The characteristics have been determined in accordance to ISO 3968.

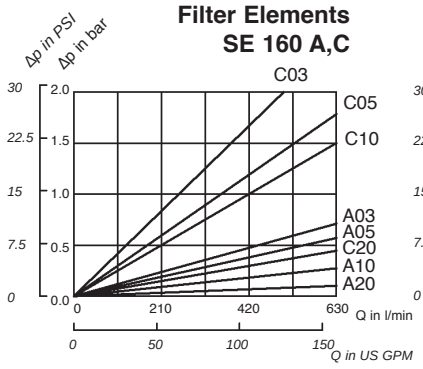

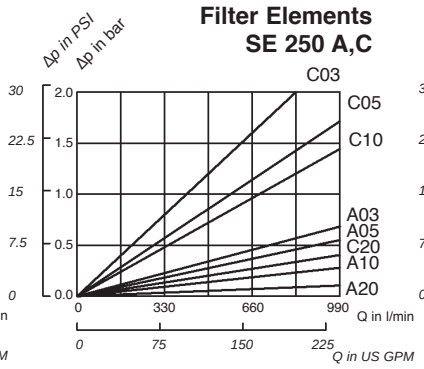

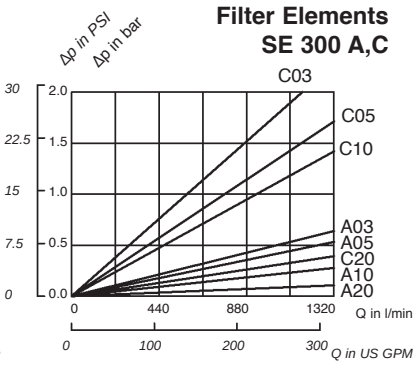

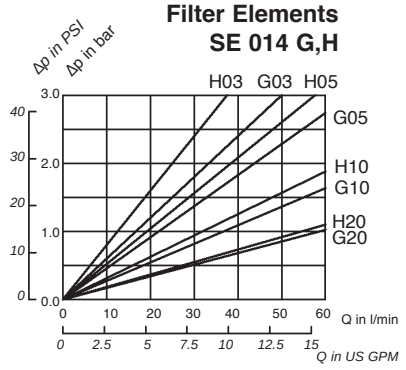

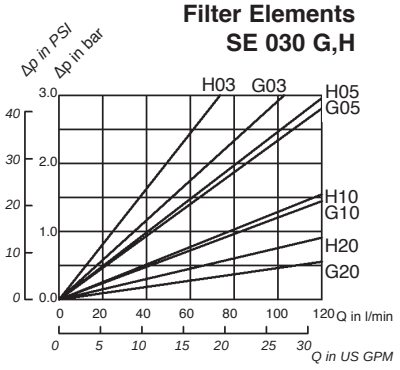

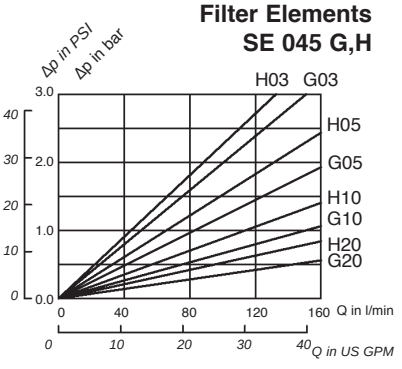

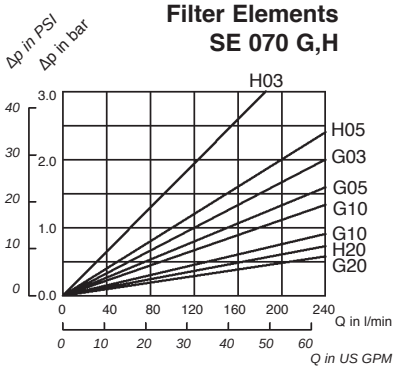

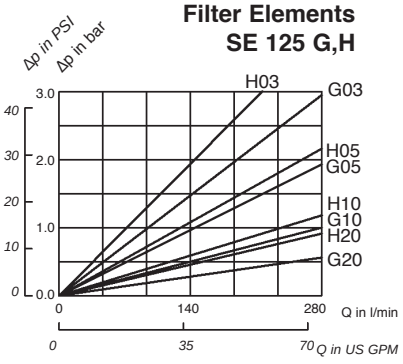

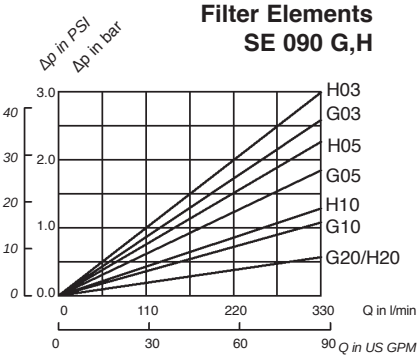

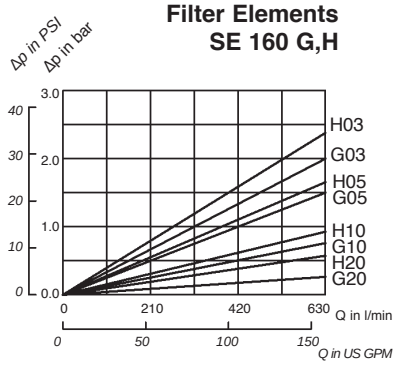

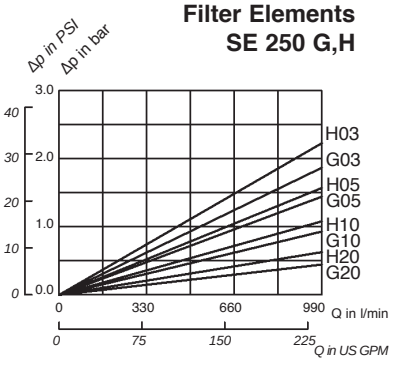

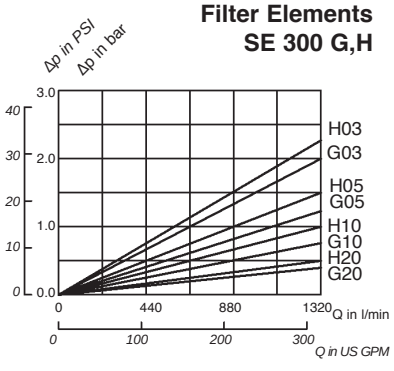

STAUFF®

FILTRATION TECHNOLOGY

2003

STAUFF

Pressure Filters SIF48

Quality and Service
Worldwide

Australia
Stauff Corporation (Pty.) Ltd.
P.O.Box 227 , 24-26 Doyle Avenue,
Unanderra Wollongong , N.S.W
2526 AUSTRALIA
Tel: +61 2 42 71 18 77
Fax: +61 2 42 71 84 32

Brazil
Stauff Brasil Ltda.
Av. Gupê 10767
Galpão 2 – Bloco A
Barueri – São Paulo – CEP 06422-120, BRAZIL
Tel: +55 (0)11-4789-9020
Fax: +55 (0)11-4789-9021

Canada
Stauff Canada Ltd.
866 Milner Avenue
Scarborough , Ontário M1B 5N7 , CANADA
Tel: +1 416 282 46 08
Fax: +1 416 282 30 39

China
Stauff International Trading (Shangai) Co., Ltd.
Shangdian Mansion, Pudong
331 , Binzhou Road
200126 Shangai, CHINA
Tel: +86 21 58 45 65 60
Fax: +86 21 58 45 66 80

France
Stauff S.A.
Z.I. de Vineuil-Blois Sud
230, Avenue du Grain d'Or
41354 Vineuil-cedex, FRANCE
Tel: +33 2 54 50 55 50
Fax: +33 2 54 42 29 19

India
Stauff India Pvt. Ltd.
Gat. No. 2340,
Pune-Nagar Road, Wagholi, INDIA
IND-Pune - 412027
Tel: +91 20 705 19 90
Fax: +91 20 705 19 89

Italy
Stauff Italia S.R.L.
Via Pola 21/23, I-20034
Birone di Giussano, ITALY
Tel: +39 0362 31 21 13
Fax: +39 0362 33 55 36

New Zealand
Stauff Corporation (NZ) Ltd.
Unit J. 150 Harris Road, P.O. Box 58517
Greenmount Auckland-NEW ZEALAND
Tel: +64 9 271 4812
Fax: +64 9 271 4832

United Kingdom
Stauff UK Ltd.
332, Coleford Road Darnall
Sheffield, S 9 5 P H, ENGLAND
Tel: +44 1142 518 518
Fax: +44 1142 518 519

USA
Stauff Corporation
7 Wm. Demarest Place
Waldwick, NJ – 07463, USA
Tel: +1 201 444 78 00
Fax: +1 201 444 78 52

Distributors and warehouses in all industrial countries.

Walter Stauffenberg GmbH & Co. KG

P. O. Box 1745 · D-58777 Werdohl
Im Ehrenfeld 4 · D-58791 Werdohl
Tel.: +49 (0) 2392 916-0
Fax: +49 (0) 2392 2505
E-mail: sales@stauff.com
Internet: http://www.stauff.com

Stauff Filtration Technology

Stauff Filtration Technology offers a complete range of filtration products and services that will provide the system designer or user with the highest level of contamination control demanded by today's most sophisticated applications. Products include pressure filters, return line filters, elements, spin on filters suction strainers, and filler breathers for various hydraulic, lubrication and fuel oils.

Stauff has the technical expertise to provide superior filter element designs for the Stauff original filter housings and also for the interchange element market. Stauff manufactures more than 10,000 different elements. Many of these are designed to fit into filter housings produced by other companies while maintaining or surpassing the original performance.

The "Stauff Contamination Control Program" includes the diagnostic services including fluid sampling and laser particle counting products needed to monitor the system contamination level.

Stauff, through its global network of wholly owned companies and technically qualified distributors, is ideally placed to assist its customers in the total contamination process providing a well balanced filtration solution.

Pressure Filter SIF48

Technical Data

STAUFF SIF48 series pressure filters are designed for in-line hydraulic applications with a maximum operating pressure of 345 bar *(5000 PSI)*. The element is changed from the top, which minimizes oil spillage. **The SIF48 series pressure filter meets the HF4 Automotive Standard.**

Technical Specification

Construction	In-line assembly, top loading, base mounted
Filter base and cap	Ductile iron
Element case	Steel
Seals	O-Rings NBR (Buna-N®) FPM (Viton®)
Port connections	BSP, NPT, SAE “O”-Ring thread or SAE Code 61 flange
Flow rating for	up to 380 l/min *(100 US GPM)* 32 cSt (150 SUS) fluids with 2” porting, 570 l/min *(150 US GPM)*
Operating pressure	max 345 bar *(5 000 PSI)*
Burst pressure	min 1035 bar *(15 000 PSI)*
Temperature range	-29°C to +107°C *(-20°F to +225°F)*
By-pass valve	Allows unfiltered oil to by-pass the contaminated element once the opening pressure has been reached
By-pass setting	2.8 bar *(40 PSI)*
Clogging indicators	standard actuating pressure 2.8 bar *(40 PSI)* indicator types: visual, electrical (AC and DC voltage versions)
Filter elements	Flow characteristics see page 7
Media	Mineral oils, other fluids on request

Pressure Filter SIF48 Dimensions

Dimensions

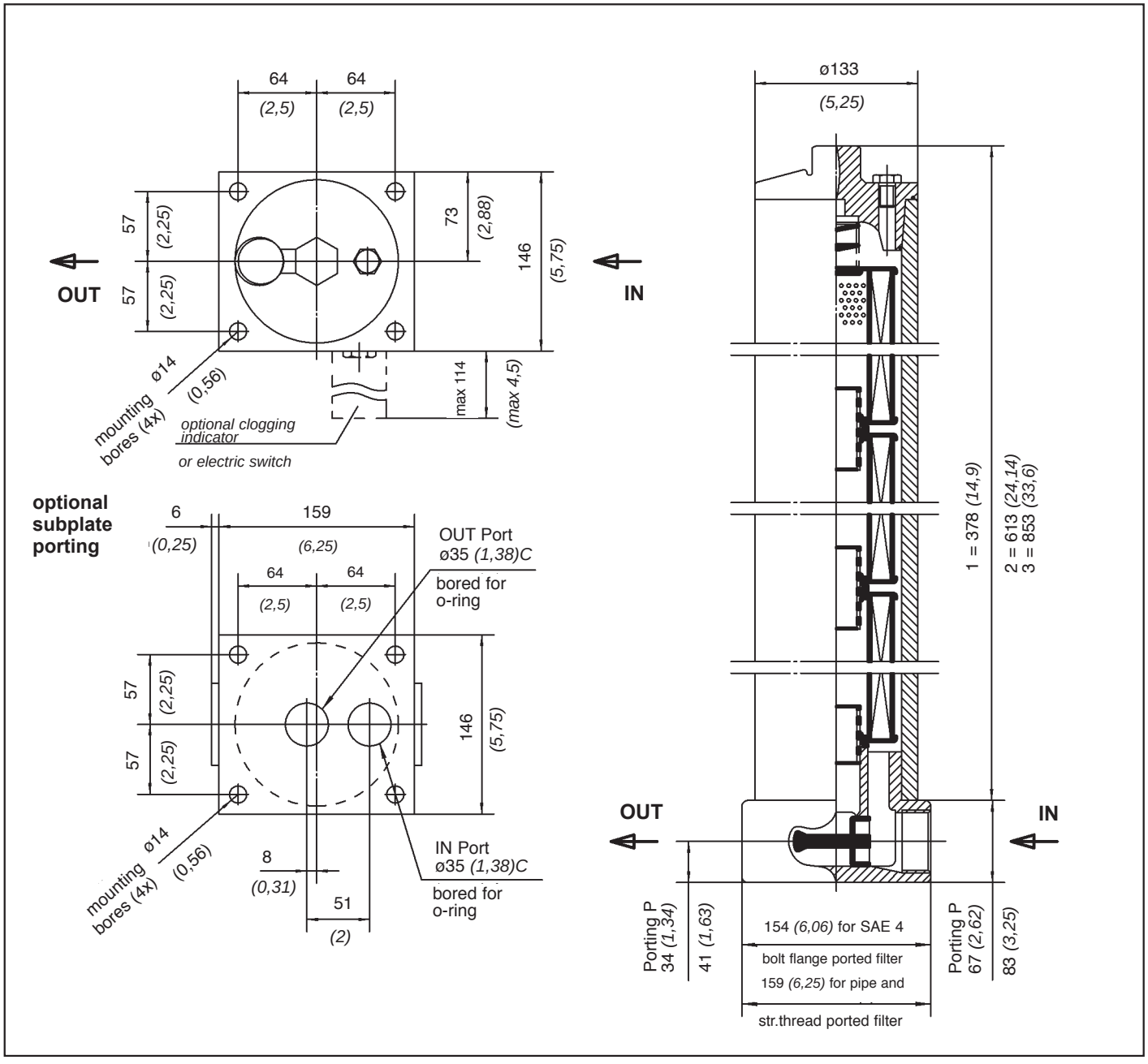

All dimensions in mm *(inch)*

Pressure Filter SIF48 Clogging Indicators

1. Visual clogging indicator

Part number HI48-V is a mechanical magnetic cartridge with a highly visible orange disk that pops up at 2.8 bar *(40 PSI)*. Once activated the orange signal continues to indicate a by-pass condition until it is manually reset.

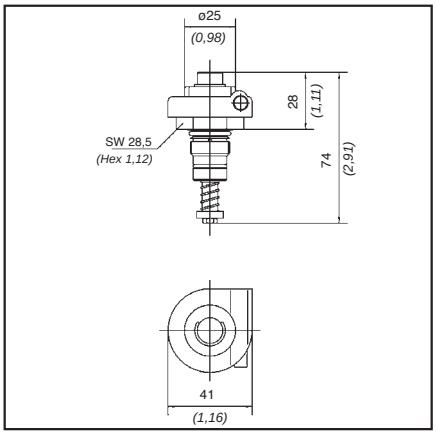

2. Electrical clogging indicator

Part number HI48-EAC and HI48-EDC are used when a electrical signal is needed to indicate when the element needs changing. The solid state switch is activated at 2.8 bar *(40 PSI)*. The indicators are supplied with a 200 mm *(8 in)* long wire leads and are NEMA 4 rated.

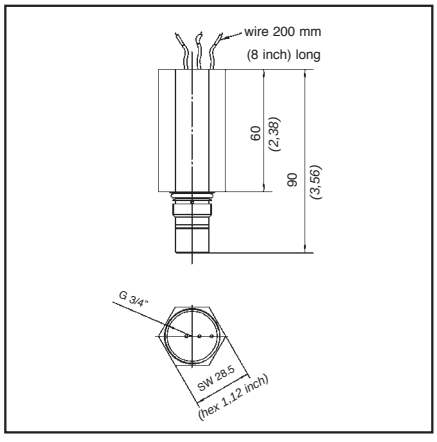

2.1 HI48-EAC Ratings

Voltage	max 240 VAC
Wattage	max 720 Watts
Current	0.10 to 6 amps
Contact type	solid state

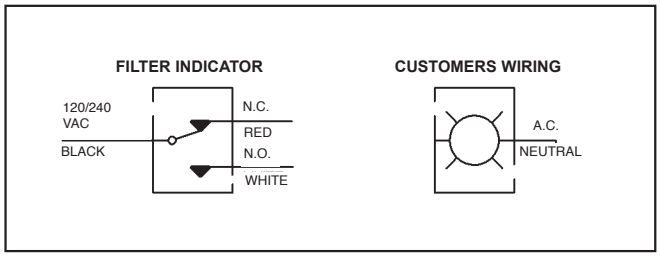

2.2 HI48-VDC Ratings

Voltage	max 100 VDC
Wattage	max 50 Watts
Current	0.01 to 2 amps
Contact type	solid state

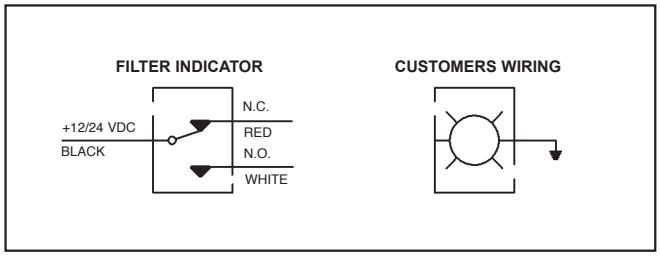

Ordering Code

HI 48 E AC /X

Clogging Indicator

Series	SIF48

Code	Execution
V	visual
E	electrical

Design Code
only for information

Voltage (only for Code E)	
AC	max 240 VAC
DC	max 100 VDC

Pressure Filter SIF48 Ordering Code

Ordering Code Filter Housings

SIF48 S ... B S1 V /X

Filter type	SIF48

Port Size

Code	Connection Type
B	G 1 1/2
S	1 7/8 - 12 SAE (Standard)
N	1 1/2 NPT
P	2 NPT
F	1 1/2 SAE Code 61 Flange
O	Sub-plate

for complete filters:
identification filter material
+ micron rating code
(see ordering code filter elements below)

Design Code
only for information

Clogging indicator

N	without clogging indic.
V	visual
E	electrical

Bowl Length

S1	Single Element
S2	Double Element
S3	Triple Element

Seal material

B	NBR (Buna®)
V	FPM (Viton®)

Ordering Code Filter Elements

RTE48 G 10 B /X

Series	RTE48

Filter material

Code	Material	max $\Delta p^{*}_{collapse}$	Micron ratings available
D	Filterpaper	10 bar *(150 PSI)*	03,10,25
G	Inorganic glass fiber	10 bar *(150 PSI)*	03,10,25

*collapse / burst resistance as per ISO 2941

Design Code
only for information

Seal material

B	NBR (Buna®)
V	FPM (Viton®)

Micron rating

03	3 µm
10	10 µm
25	25 µm

Flow Characteristics

The following characteristics are valid for mineral based fluids with a density of 0,85 kg/dm³ and the kinematic viscosity of 30 mm²/s. The characteristics have been determined in accordance to ISO 3968.

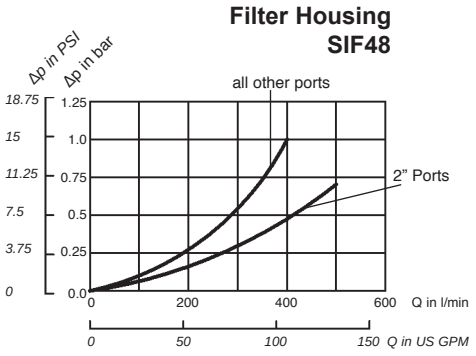

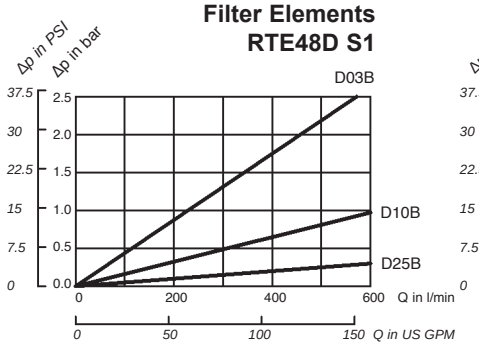

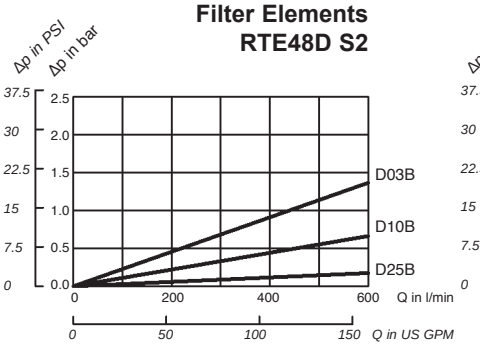

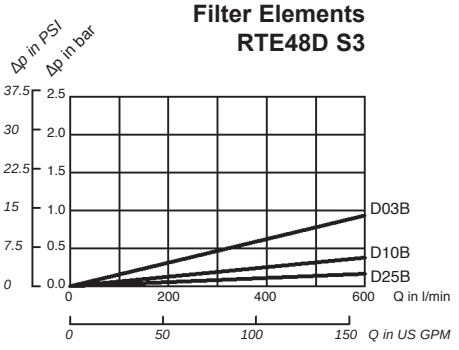

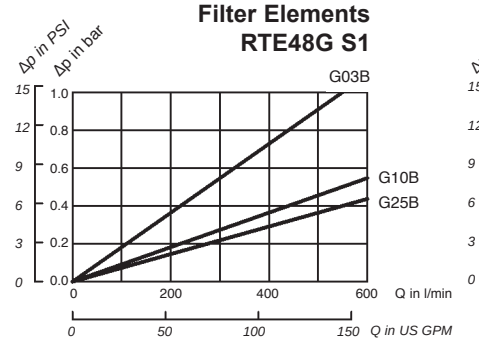

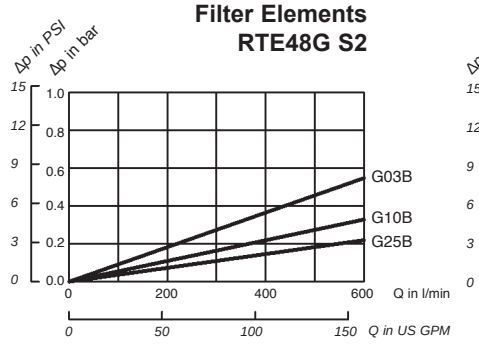

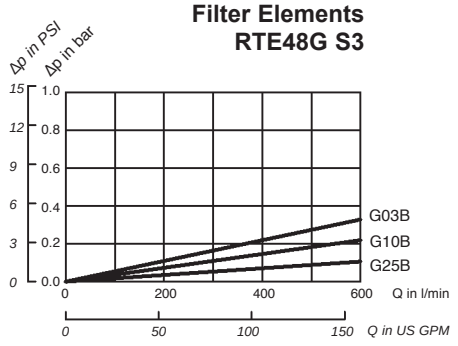

STAUFF®

FILTRATION TECHNOLOGY

2003

STAUFF

Medium Pressure Filters SMPF

Quality and Service
Worldwide

Australia
Stauff Corporation (Pty.) Ltd.
P.O.Box 227 , 24-26 Doyle Avenue,
Unanderra Wollongong , N.S.W
2526 AUSTRALIA
Tel: +61 2 42 71 18 77
Fax: +61 2 42 71 84 32

Brazil
Stauff Brasil Ltda.
Av. Gupê 10767
Galpão 2 – Bloco A
Barueri – São Paulo – CEP 06422-120, BRAZIL
Tel: +55 (0)11-4789-9020
Fax: +55 (0)11-4789-9021

Canada
Stauff Canada Ltd.
866 Milner Avenue
Scarborough , Ontário M1B 5N7 , CANADA
Tel: +1 416 282 46 08
Fax: +1 416 282 30 39

China
Stauff International Trading (Shangai) Co., Ltd.
Shangdian Mansion, Pudong
331 , Binzhou Road
200126 Shangai, CHINA
Tel: +86 21 58 45 65 60
Fax: +86 21 58 45 66 80

France
Stauff S.A.
Z.I. de Vineuil-Blois Sud
230, Avenue du Grain d'Or
41354 Vineuil-cedex, FRANCE
Tel: +33 2 54 50 55 50
Fax: +33 2 54 42 29 19

India
Stauff India Pvt. Ltd.
Gat. No. 2340,
Pune-Nagar Road, Wagholi, INDIA
IND-Pune - 412027
Tel: +91 20 705 19 90
Fax: +91 20 705 19 89

Italy
Stauff Italia S.R.L.
Via Pola 21/23, I-20034
Birone di Giussano, ITALY
Tel: +39 0362 31 21 13
Fax: +39 0362 33 55 36

New Zealand
Stauff Corporation (NZ) Ltd.
Unit J. 150 Harris Road, P.O. Box 58517
Greenmount Auckland-NEW ZEALAND
Tel: +64 9 271 4812
Fax: +64 9 271 4832

United Kingdom
Stauff UK Ltd.
332, Coleford Road Darnall
Sheffield, S 9 5 P H, ENGLAND
Tel: +44 1142 518 518
Fax: +44 1142 518 519

USA
Stauff Corporation
7 Wm. Demarest Place
Waldwick, NJ – 07463, USA
Tel: +1 201 444 78 00
Fax: +1 201 444 78 52

Distributors and warehouses in all industrial countries.

Walter Stauffenberg GmbH & Co. KG

P. O. Box 1745 · D-58777 Werdohl
Im Ehrenfeld 4 · D-58791 Werdohl
Tel.: +49 (0) 2392 916-0
Fax: +49 (0) 2392 2505
E-mail: sales@stauff.com
Internet: http://www.stauff.com

Stauff Filtration Technology

Stauff Filtration Technology offers a complete range of filtration products and services that will provide the system designer or user with the highest level of contamination control demanded by today's most sophisticated applications. Products include pressure filters, return line filters, elements, spin on filters suction strainers, and filler breathers for various hydraulic, lubrication and fuel oils.

Stauff has the technical expertise to provide superior filter element designs for the Stauff original filter housings and also for the interchange element market. Stauff manufactures more than 10,000 different elements. Many of these are designed to fit into filter housings produced by other companies while maintaining or surpassing the original performance.

The "Stauff Contamination Control Program" includes the diagnostic services including fluid sampling and laser particle counting products needed to monitor the system contamination level.

Stauff, through its global network of wholly owned companies and technically qualified distributors, is ideally placed to assist its customers in the total contamination process providing a well balanced filtration solution.

Medium Pressure Filter SMPF

Technical Data

STAUFF SMPF series medium pressure filters are designed for in-line hydraulic applications with a maximum operating pressure of 110 bar *(1600 PSI)*. Used together with STAUFF filter elements, a high efficiency of contaminant removal is assured.

Technical Specification

Construction	In-line assembly
Filter base and cap	Aluminium alloy
Element case	Aluminium alloy
Seals	O-Rings NBR (Buna-N®)
Port connections	BSP, SAE “O”-Ring thread
Flow rating	up to 90 l/min *(25 US GPM)* for 32 cSt *(150 SUS)* fluids
Operating pressure	max 110 bar *(1600 PSI)*
Test pressure	200 bar *(2900 PSI)*
Temperature range	-25°C to +110°C *(-13°F to +230°F)*
By-pass valve	Allows unfiltered oil to by-pass the contaminated element once the opening pressure has been reached
By-pass setting	6 bar *(87 PSI)*
Clogging indicators	Visual, 5 bar *(72 PSI)* actuating pressure Electrical, 5 bar *(72 PSI)* actuating pressure
Filter elements	Flow characteristics see page 7
Media	Mineral oils, other fluids on request

Medium Pressure Filter SMPF Dimensions

Dimensions

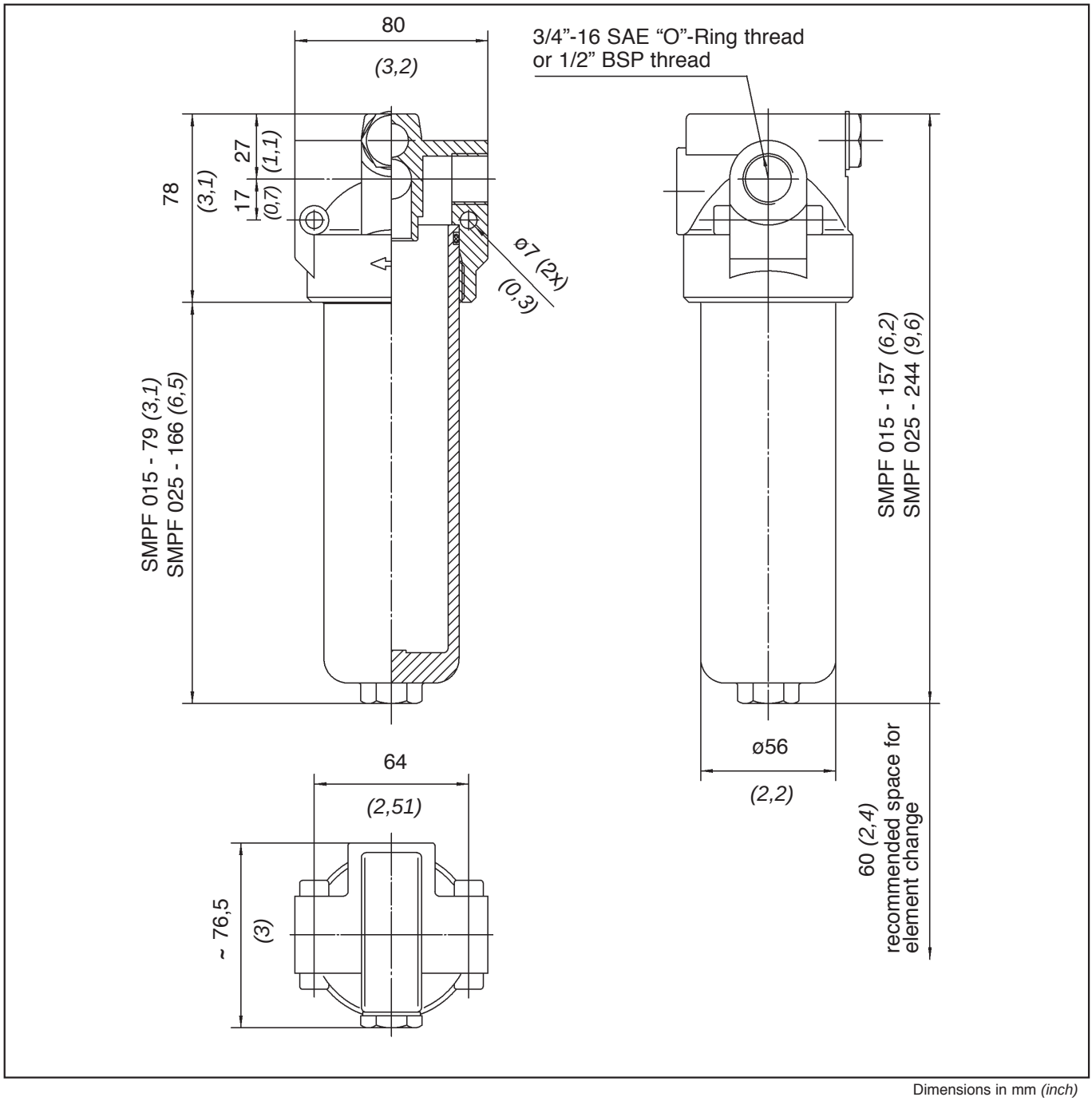

Dimensions in mm *(inch)*

Filter Size	Nominal Flow	A	B	C	D	E	F	H	I	M	Thread connection G SAE	Thread connection G BSP	Weight
SMPF015	60 LPM *(15 GPM)*	80 *(3.2)*	64 *(2.52)*	78 *(3.1)*	27 *(1.1)*	17 *(0.7)*	7 *(0.3)*	79 *(3.1)*	157 *(6.2)*	60 *(2.4)*	*3/4-16 UN*	*G 1/2*	0.95 kg *(2.1 lb)*
SMPF025	90 LPM *(25 GPM)*	80 *(3.2)*	64 *(2.52)*	78 *(3.1)*	27 *(1.1)*	17 *(0.7)*	7 *(0.3)*	166 *(6.5)*	244 *(9.61)*	60 *(2.4)*	*3/4-16 UN*	*G 1/2*	1.25 kg *(2.8lb)*

Medium Pressure Filter SMPF Clogging Indicators

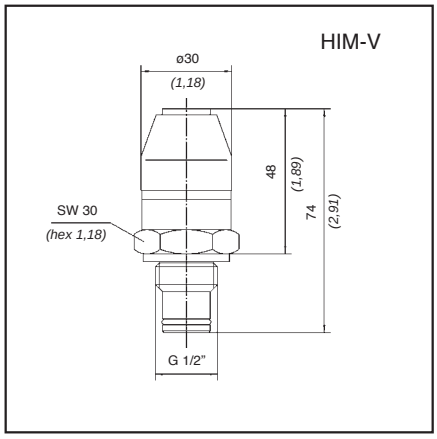

1. Visual clogging indicator

Part number HIM-V is a clogging indicator actuated by the differential pressure across the filter element. The actuating pressure of 5 bar *(72 PSI)* allows the dirty element to be changed before the by-pass setting of 6 bar *(87 PSI)* is reached.

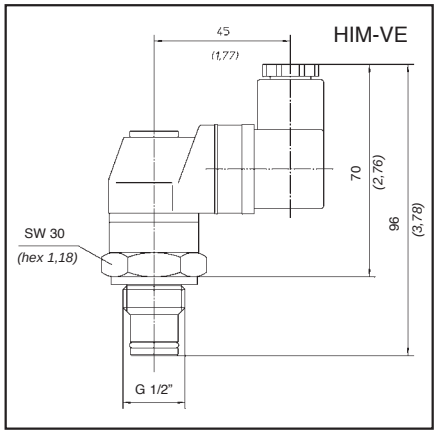

2. Visual-Electrical clogging indicator

Part number HIM-VE is used when an electrical signal is needed to indicate when the element needs changing. It is actuated by the differential pressure across the filter element. The actuating pressure of 5 bar *(72 PSI)* allows the dirty element to be changed before the by-pass setting of 6 bar *(87 PSI)* is reached.

HIM-VE Rated capacity

Voltage V	Resistive Load Amps	Inductive Load Amps
125 VAC	5	5
250 VAC	5	5
15 VAC	10	10
30 VDC	5	5
50 VDC	1	1
125 VDC	0.5	0.06

HIM-VE Wiring diagram

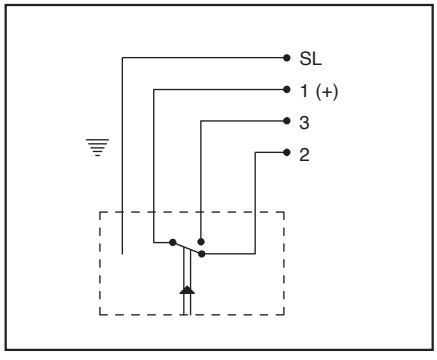

Ordering Code

HI M - V /X

Clogging Indicator	
Series	**SMPF**

Design Code	
only for information	

V	visual
VE	visual - electrical

Medium Pressure Filter SMPF Ordering Code

Ordering Code Filter Housings

SMPF 015 ... B - T B / B / E /X

Filter type	SMPF

Group

Size	Flow*	
	l/min	GPM
15	60	15
25	90	25

* Note: exact flow will depend on filter element selected. Consult technical data on page 7.

for complete filters:
identification filter material
+ micron rating code
(see ordering code filter elements below)

Seal material

B	NBR (Buna®)

Other seal material on request

Design Code
only for information

Clogging Indicators

V	visual
E	visual / electrical

Valve

O	Without Valve
B	By-pass Valve

Connection Style

B	BSP	G1/2
U	SAE O-Ring thread	3/4-16 UN

Mounting Style

T	In-line

Ordering Code Filter Elements

SME - 015 E 03 B /X

Series	SME

Group
according to filter housing

Filter material

Code	Material	max $\Delta p^*_{collapse}$	Micron ratings available
E	Inorganic glass fiber	30 bar *(435 PSI)*	03,10,20
S	Stainless mesh	20 bar *(290 PSI)*	60

*collapse/ burst resistance as per ISO 2941

Design Code
only for information

Seal material

B	NBR (Buna®)

Other seal material on request

Micron rating

Code	Rating
03	3 µm
10	10 µm
20	25 µm
60	60 µm

Other micron ratings on request

Flow Characteristics of Medium Pressure Filters

The following characteristics are valid for mineral oils with a density of 0,85 kg/dm³ and the kinematic viscosity of 30 mm²/s. The characteristics have been determined in accordance to ISO 3968.

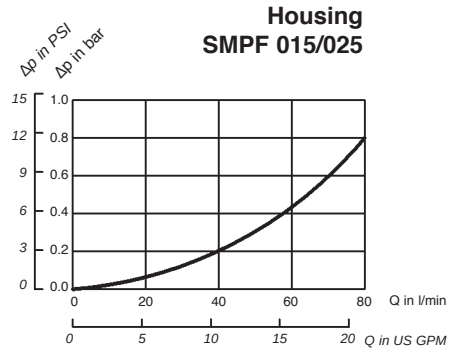

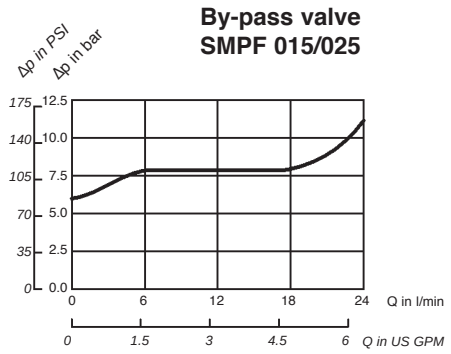

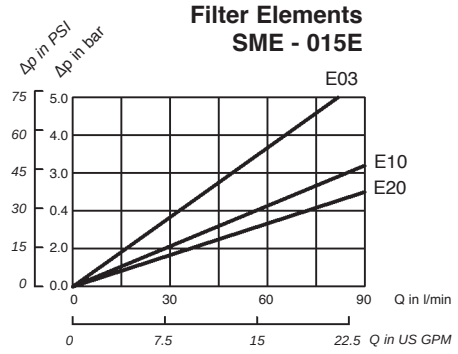

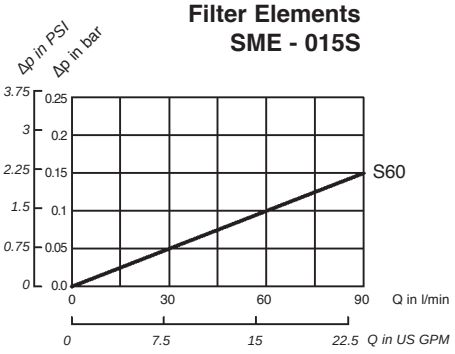

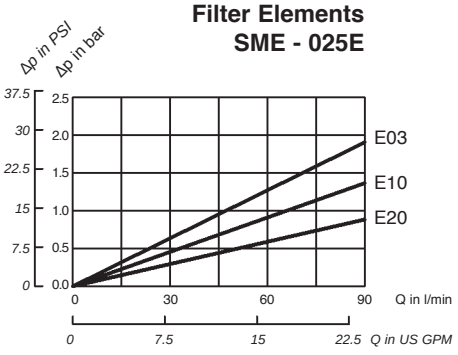

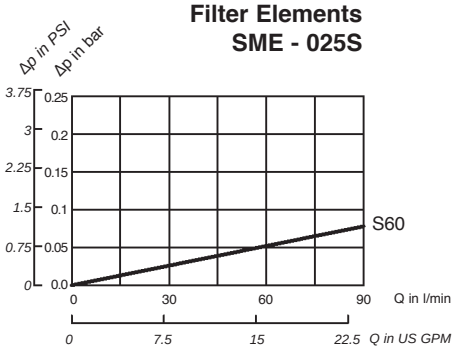

Return Line Filters

Stauff offers a complete selection or return line filters—large flow industrial, tank top, in-tank and automotive spec.

LARGE FLOW RETURN LINE FILTERS SRFL-S & SRFL-D

Low-pressure high flow return line filters are designed to handle large flows in any industrial hydraulic or lubrication system.

Return Line Duplex Filter
SRFL-S/D Technical Data
Return Line Simplex Filter
SRFL-S 160-600 Dimensions
Return Line Simplex Filter
SRFL-S 1200-3600 Dimensions
Return Line Duplex Filter
SRFL-D 160-600 Dimensions
Return Line Duplex Filter
SRFL-D 1200-2400 Dimensions
Return Line Duplex Filter
SRFL-D 3600 Dimensions
Return Line Filter SRFL-S/D
Ordering Code
Filter Elements RE & Options
Flow Characteristics

TANKS TOP RETURN LINE FILTERS RF &RFB

Designed as tank-top filters, the RF Series allows easy element replacement and quick installation.

Return Line Filter RF 014-130
Technical Data
Dimensions
Options
Ordering Code
Flow Characteristics
Return Line Filter RFB 022-052
Technical Data
Dimensions
Options
Ordering Code
Flow Characteristics

IN-TANK RETURN LINE FILTERS RTF

Designed for in-tank hydraulic applications, 50 to 145 PSI.

10-25 Series (50 PSI)
Technical Data
Dimensions
Ordering Code & Flow Characteristics

40 Series (100 PSI)
Technical Data
Dimensions
Ordering Code
Flow Characteristics
20 Series (145 PSI)
Technical Data
Dimensions
Ordering Code
Flow Characteristics
30 Series (145 PSI)
Technical Data
Dimensions
Ordering Code
Flow Characteristics
Filter Indicators

AUTOMOTIVE SPEC RETURN LINE FILTERS RIF48

Comply with the HF4 automotive standards.
Technical Data
Dimensions
Options
Ordering Code
Flow Characteristics

STAUFF®

STAUFF®

FILTRATION TECHNOLOGY

2003

STAUFF

Return Line Filters
SRFL-S & SRFL-D

Quality and Service
Worldwide

Australia
Stauff Corporation (Pty.) Ltd.
P.O.Box 227 , 24-26 Doyle Avenue,
Unanderra Wollongong , N.S.W
2526 AUSTRALIA
Tel: +61 2 42 71 18 77
Fax: +61 2 42 71 84 32

Brazil
Stauff Brasil Ltda.
Av. Gupê 10767
Galpão 2 – Bloco A
Barueri – São Paulo – CEP 06422-120, BRAZIL
Tel: +55 (0)11-4789-9020
Fax: +55 (0)11-4789-9021

Canada
Stauff Canada Ltd.
866 Milner Avenue
Scarborough , Ontário M1B 5N7 , CANADA
Tel: +1 416 282 46 08
Fax: +1 416 282 30 39

China
Stauff International Trading (Shangai) Co., Ltd.
Shangdian Mansion, Pudong
331 , Binzhou Road
200126 Shangai, CHINA
Tel: +86 21 58 45 65 60
Fax: +86 21 58 45 66 80

France
Stauff S.A.
Z.I. de Vineuil-Blois Sud
230, Avenue du Grain d'Or
41354 Vineuil-cedex, FRANCE
Tel: +33 2 54 50 55 50
Fax: +33 2 54 42 29 19

India
Stauff India Pvt. Ltd.
Gat. No. 2340,
Pune-Nagar Road, Wagholi, INDIA
IND-Pune - 412027
Tel: +91 20 705 19 90
Fax: +91 20 705 19 89

Italy
Stauff Italia S.R.L.
Via Pola 21/23, I-20034
Birone di Giussano, ITALY
Tel: +39 0362 31 21 13
Fax: +39 0362 33 55 36

New Zealand
Stauff Corporation (NZ) Ltd.
Unit J. 150 Harris Road, P.O. Box 58517
Greenmount Auckland-NEW ZEALAND
Tel: +64 9 271 4812
Fax: +64 9 271 4832

United Kingdom
Stauff UK Ltd.
332, Coleford Road Darnall
Sheffield, S 9 5 P H, ENGLAND
Tel: +44 1142 518 518
Fax: +44 1142 518 519

USA
Stauff Corporation
7 Wm. Demarest Place
Waldwick, NJ – 07463, USA
Tel: +1 201 444 78 00
Fax: +1 201 444 78 52

Distributors and warehouses in all industrial countries.

Walter Stauffenberg GmbH & Co. KG

P. O. Box 1745 · D-58777 Werdohl · Germany
Im Ehrenfeld 4 · D-58791 Werdohl · Germany
Tel.: +49 (0) 2392 916-0
Fax: +49 (0) 2392 2505
E-mail: sales@stauff.com
Internet: http://www.stauff.com

Stauff Filtration Technology

Stauff Filtration Technology offers a complete range of filtration products and services that will provide the system designer or user with the highest level of contamination control demanded by today's most sophisticated applications. Products include pressure filters, return line filters, elements, spin on filters suction strainers, and filler breathers for various hydraulic, lubrication and fuel oils.

Stauff has the technical expertise to provide superior filter element designs for the Stauff original filter housings and also for the interchange element market. Stauff manufactures more than 10,000 different elements. Many of these are designed to fit into filter housings produced by other companies while maintaining or surpassing the original performance.

The "Stauff Contamination Control Program" includes the diagnostic services including fluid sampling and laser particle counting products needed to monitor the system contamination level.

Stauff, through its global network of wholly owned companies and technically qualified distributors, is ideally placed to assist its customers in the total contamination process providing a well balanced filtration solution.

Page

Technical Data

STAUFF return line simplex filter SRFL-S and duplex filter SRFL-D are designed for in-line hydraulic applications. With its compact construction and the easy to maintain assembly the filter SRFL-S and SRFL-D are suitable for flow rates up to 6600 l/min *(1750 US GPM)*. The two housings of the duplex filter, SRFL-D are connected with a special gate valve that is operated with a lever or hand wheel. Therefore the filter may be serviced without shutting down the hydraulic system. A high efficiency of contaminant removal is assured by using STAUFF replacement filter elements RE series. The high dirt holding capacity of STAUFF elements ensures a long service life and, as a result, reduced maintenance costs.

Technical Specification

Construction	In-line assembly, base mounted
Housings	Carbon steel Stainless steel (on request)
Seals	NBR (Buna-N®), FPM (Viton®)
Port connection	ANSI, SAE and DIN flanges
Operating pressure	max 14 bar *(232 PSI)*
Flow rating	up to 6600 l/min *(1750 US GPM)*
Temperature Range	-10°C up to +100°C *(14ºF up to 212ºF)*

By-pass valve (integrated in the filter element)	Opening pressure 3 bar ± 0,3 bar *(43,5 PSI ± 4,35 PSI)* other pressures on request
Clogging indicator	Differential pressure switch, setting 1,6 bar *(23 PSI)* scale 0...1,6 bar *(0...23 PSI)*
Filter elements	Specification see page 10
Media	Mineral oils, lubrication oils other fluids on request

Dimensions SRFL-S 160 / 200 / 300 / 600

Detail arrangement of filter elements

SRFL-S 160 / 200 / 300 / 600

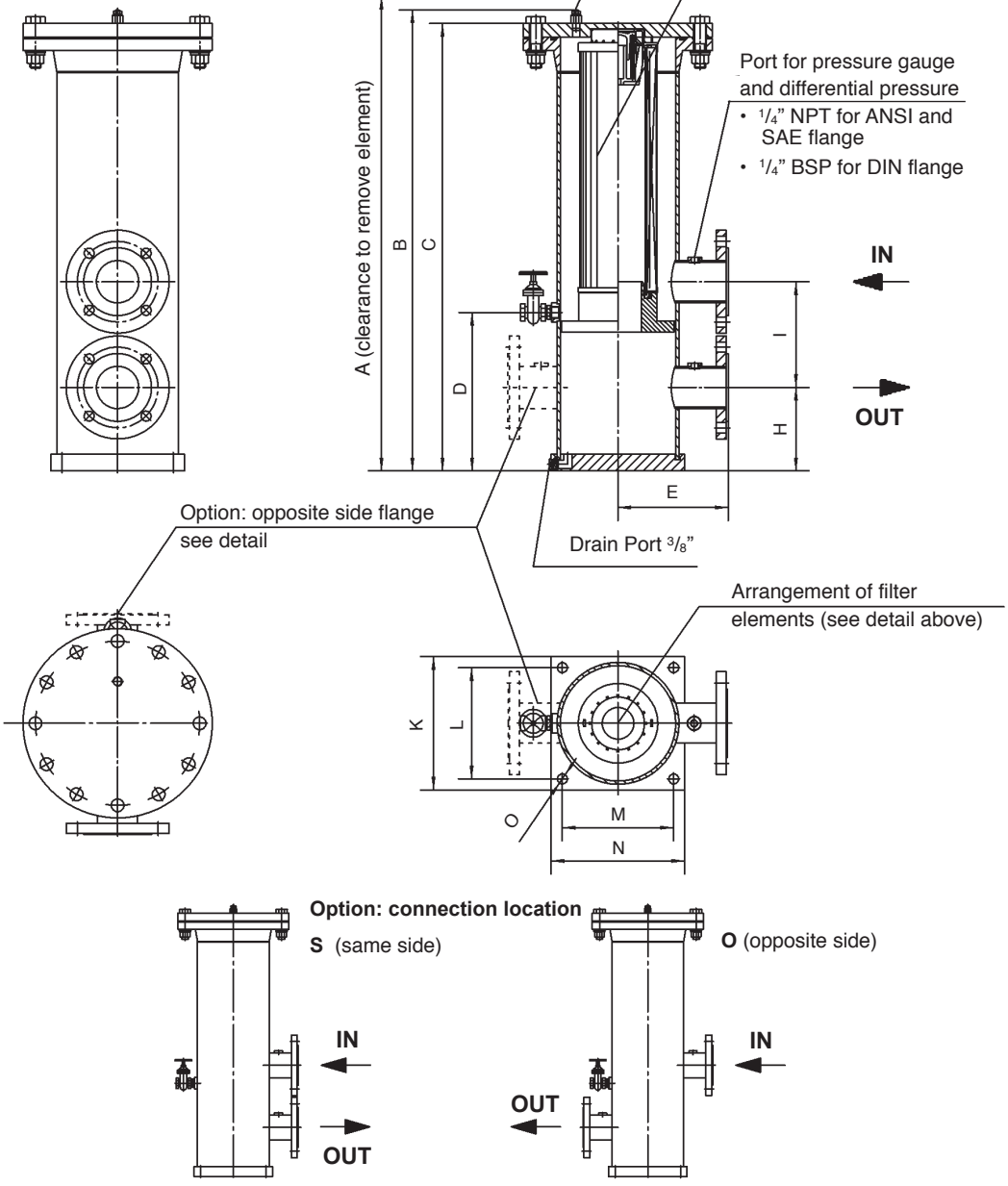

Option: connection location

S (same side)

O (opposite side)

All dimensions in mm *(inch)*

Filter Size	Flange Connection			Dimensions												Total oil Capacity		Weight (without element)		Filter Element S	
	DIN	ANSI	SAE	A	B	C	D	E	H	I	K	L	M	N	O	l	gal	kg	lbs	Designation	Qty
SRFL-S-160	DN40	1-1/2”	1-1/2”	885,8 *(34,87)*	607,6 *(23,92)*	584 *(22,99)*	214 *(8,43)*	148 *(5,83)*	130 *(5,12)*	155 *(6,1)*	150 *(5,91)*	125 *(4,92)*	125 *(4,92)*	150 *(5,91)*	11 *(0,43)*	6,0	*1,59*	14,5	*32*	RE-160...	1 x 1
SRFL-S-200	DN50	2”	2”	1045,8 *(41,17)*	688,7 *(27,12)*	664 *(26,14)*	214 *(8,43)*	148 *(5,83)*	140 *(5,51)*	190 *(7,48)*	150 *(5,91)*	125 *(4,92)*	125 *(4,92)*	150 *(5,91)*	11 *(0,43)*	7,1	*1,86*	15,9	*35*	RE-200...	1 x 1
SRFL-S-300	DN65	2-1/2”	2-1/2”	1248,7 *(49,16)*	828,6 *(32,63)*	803,9 *(31,65)*	285 *(11,22)*	198 *(7,8)*	150 *(5,91)*	190 *(7,48)*	240 *(9,45)*	200 *(7,87)*	200 *(7,87)*	240 *(9,45)*	18 *(0,71)*	22,2	*5,87*	29	*64*	RE-300...	1 x 1
SRFL-S-600	DN80	3”	3”	2126,7 *(83,73)*	1267,6 *(49,91)*	1242,9 *(48,93)*	285 *(11,22)*	198 *(7,8)*	160 *(6,3)*	220 *(8,66)*	240 *(9,45)*	200 *(7,87)*	200 *(7,87)*	240 *(9,45)*	18 *(0,71)*	37,1	*9,80*	34,5	*76*	RE-600...	1 x 1

Dimensions SRFL-S 1200 / 1800 / 2400 / 3600

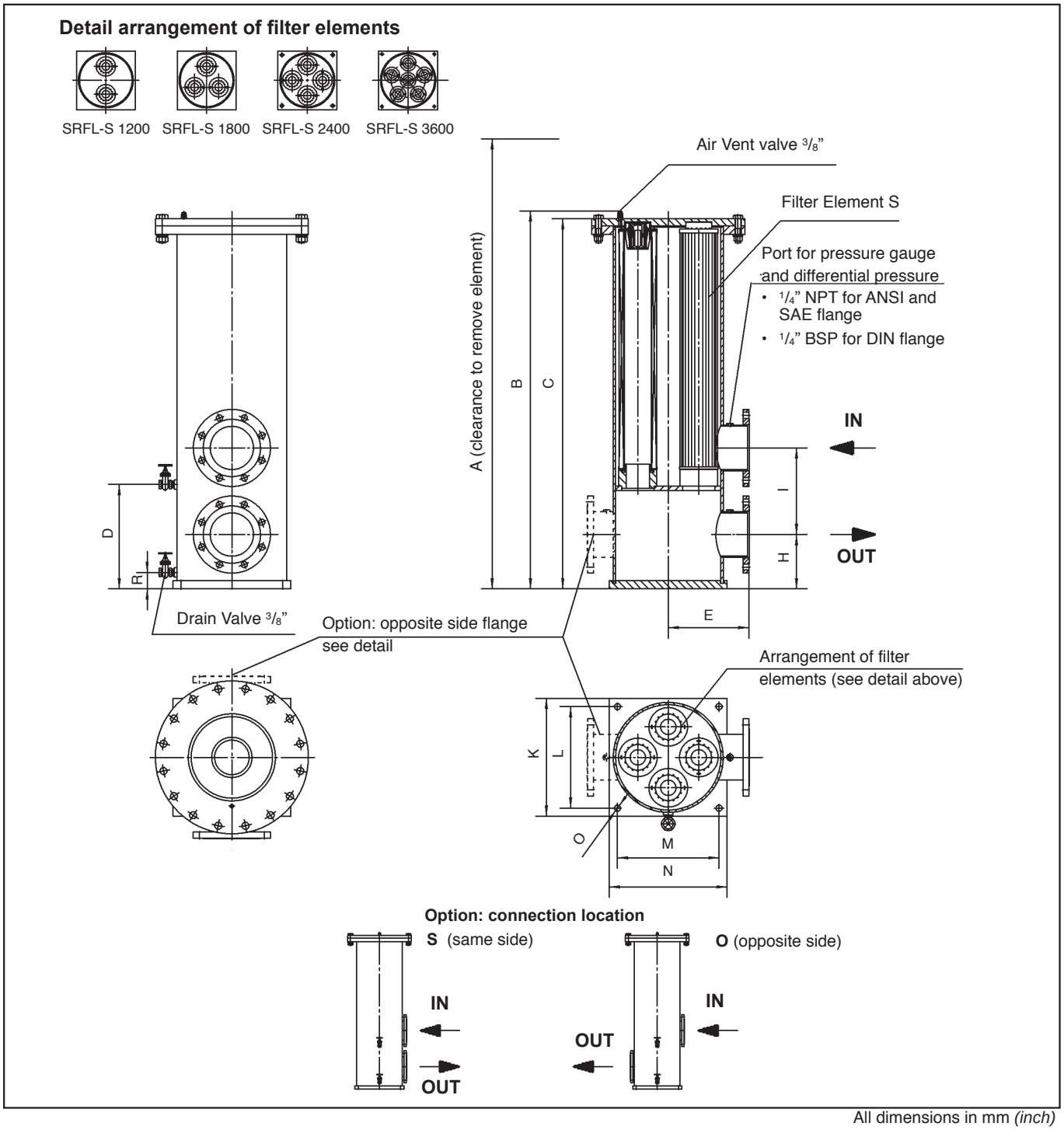

All dimensions in mm *(inch)*

Filter Size	Flange Connection			Dimensions													Total oil Capacity		Weight (without element)		Filter Element S	
	DIN	ANSI	SAE	A	B	C	D	E	H	I	K	L	M	N	O	R	l	gal	kg	lbs	Designation	Qty
SRFL-S-1200	DN100	4"	4"	2176,7 *(85,7)*	1319,6 *(51,96)*	1294,9 *(50,98)*	275 *(10,83)*	273 *(10,75)*	190 *(7,48)*	250 *(9,84)*	385 *(15,16)*	325 *(12,8)*	325 *(12,8)*	385 *(15,16)*	23 *(0,91)*	60 *(2,36)*	103	*27,2*	86,2	*190*	RE-600...	1 x 2
SRFL-S-1800	DN125	5"	5"	2176,7 *(85,7)*	1323,6 *(52,11)*	1294,9 *(50,98)*	275 *(10,83)*	273 *(10,75)*	190 *(7,48)*	280 *(11,02)*	385 *(15,16)*	325 *(12,8)*	325 *(12,8)*	385 *(15,16)*	23 *(0,91)*	60 *(2,36)*	103	*27,2*	90,7	*200*	RE-600...	1 x 3
SRFL-S-2400	DN150	6"	6"	2249,1 *(88,55)*	1394,8 *(54,92)*	1366,1 *(53,78)*	325 *(12,8)*	298 *(11,73)*	200 *(7,87)*	320 *(12,6)*	435 *(17,13)*	375 *(14,76)*	375 *(14,76)*	435 *(17,13)*	23 *(0,91)*	60 *(2,36)*	149	*39,3*	105,2	*232*	RE-600...	1 x 4
SRFL-S-3600	DN200	8"	8"	2249,1 *(88,55)*	1392,8 *(54,84)*	1368,1 *(53,68)*	325 *(12,8)*	398 *(15,67)*	252 *(9,92)*	425 *(16,73)*	540 *(21,26)*	480 *(18,9)*	480 *(18,9)*	540 *(21,26)*	23 *(0,91)*	60 *(2,36)*	232	*61,3*	154,2	*340*	RE-600...	1 x 6

Return Line Duplex Filter SRFL-D 160-600 Dimensions

Dimensions SRFL-D 160 / 200 / 300 / 600

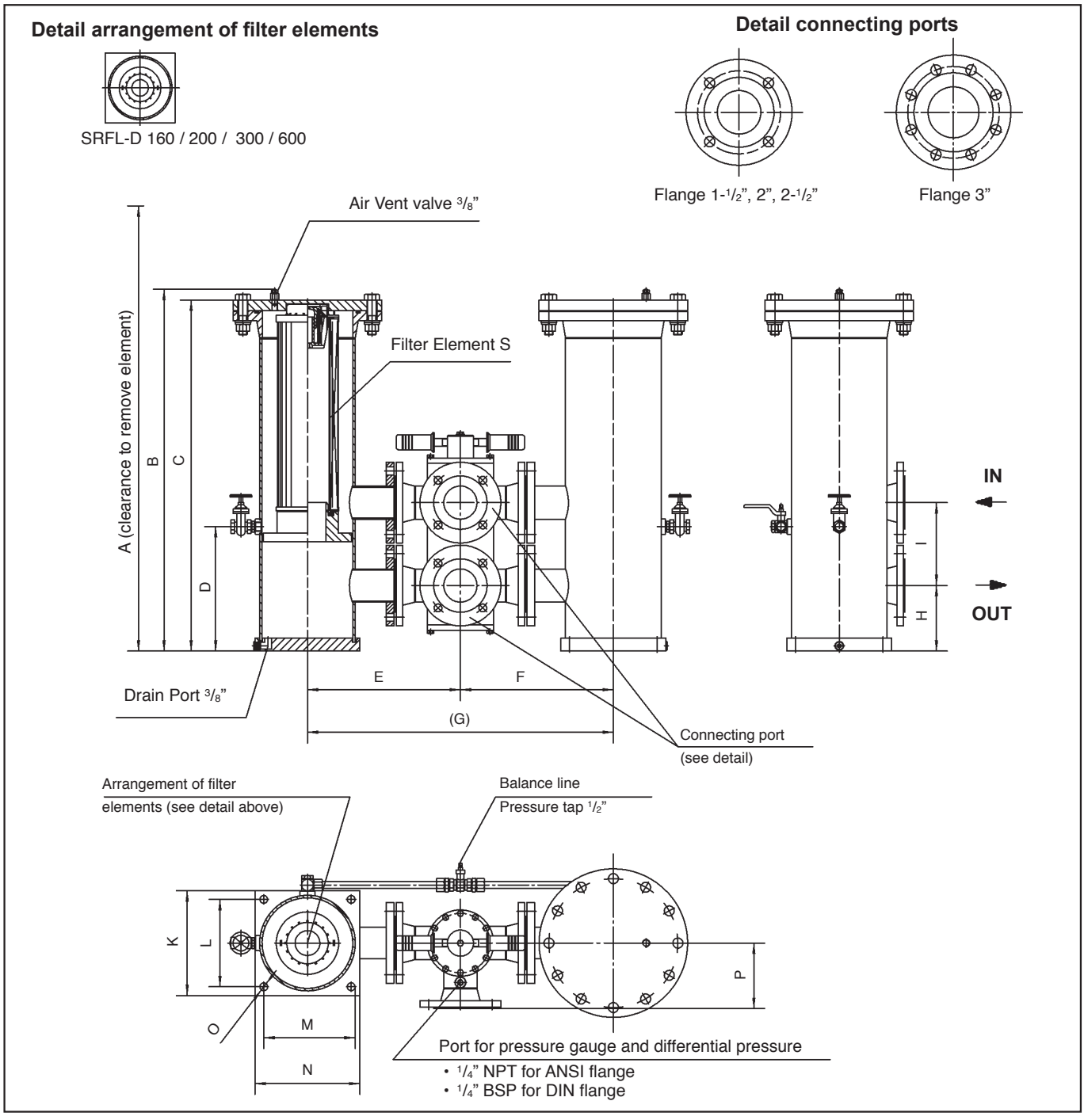

All dimensions in mm *(inch)*

Filter Size	Flange Connection		Dimensions															Total oil Capacity		Weight (without element)		Filter Element S	
	DIN	ANSI	A	B	C	D	E	F	G	H	I	K	L	M	N	O	P	l	gal	kg	lbs	Designation	Qty
SRFL-D-160	DN 40	1-1/2"	885,8 *(34,87)*	607,6 *(23,92)*	584 *(22,99)*	214 *(8,43)*	260 *(10,24)*	260 *(10,24)*	520 *(20,47)*	130 *(5,12)*	155 *(6,1)*	150 *(5,91)*	125 *(4,92)*	125 *(4,92)*	150 *(5,91)*	11 *(0,43)*	110 *(4,33)*	6,02	*1,59*	43	*95*	RE-160...	2 x 1
SRFL-D-200	DN 50	2"	1045,8 *(41,17)*	688,7 *(27,12)*	642 *(25,28)*	214 *(8,43)*	300 *(11,81)*	300 *(11,81)*	600 *(23,62)*	140 *(5,51)*	190 *(7,48)*	150 *(5,91)*	125 *(4,92)*	125 *(4,92)*	150 *(5,91)*	11 *(0,43)*	150 *(5,91)*	7,11	*1,86*	56,7	*125*	RE-200...	2 x 1
SRFL-D-300	DN 65	2-1/2"	1248,7 *(49,16)*	828,6 *(32,63)*	803,9 *(31,65)*	285 *(11,22)*	350 *(13,78)*	350 *(13,78)*	700 *(27,56)*	150 *(5,91)*	190 *(7,48)*	240 *(9,45)*	200 *(7,87)*	200 *(7,87)*	240 *(9,45)*	18 *(0,71)*	150 *(5,91)*	22,24	*5,87*	84	*185*	RE-300...	2 x 1
SRFL-D-600	DN 80	3"	2126,7 *(83,73)*	1267,6 *(49,91)*	1242,9 *(48,93)*	285 *(11,22)*	375 *(14,76)*	375 *(14,76)*	750 *(29,53)*	160 *(6,3)*	220 *(8,66)*	240 *(9,45)*	200 *(7,87)*	200 *(7,87)*	240 *(9,45)*	18 *(0,71)*	175 *(6,89)*	37,1	*9,8*	104	*230*	RE-600...	2 x 1

Return Line Duplex Filter SRFL-D 1200-2400 Dimensions

Dimensions SRFL-D 1200 / 1800 / 2400

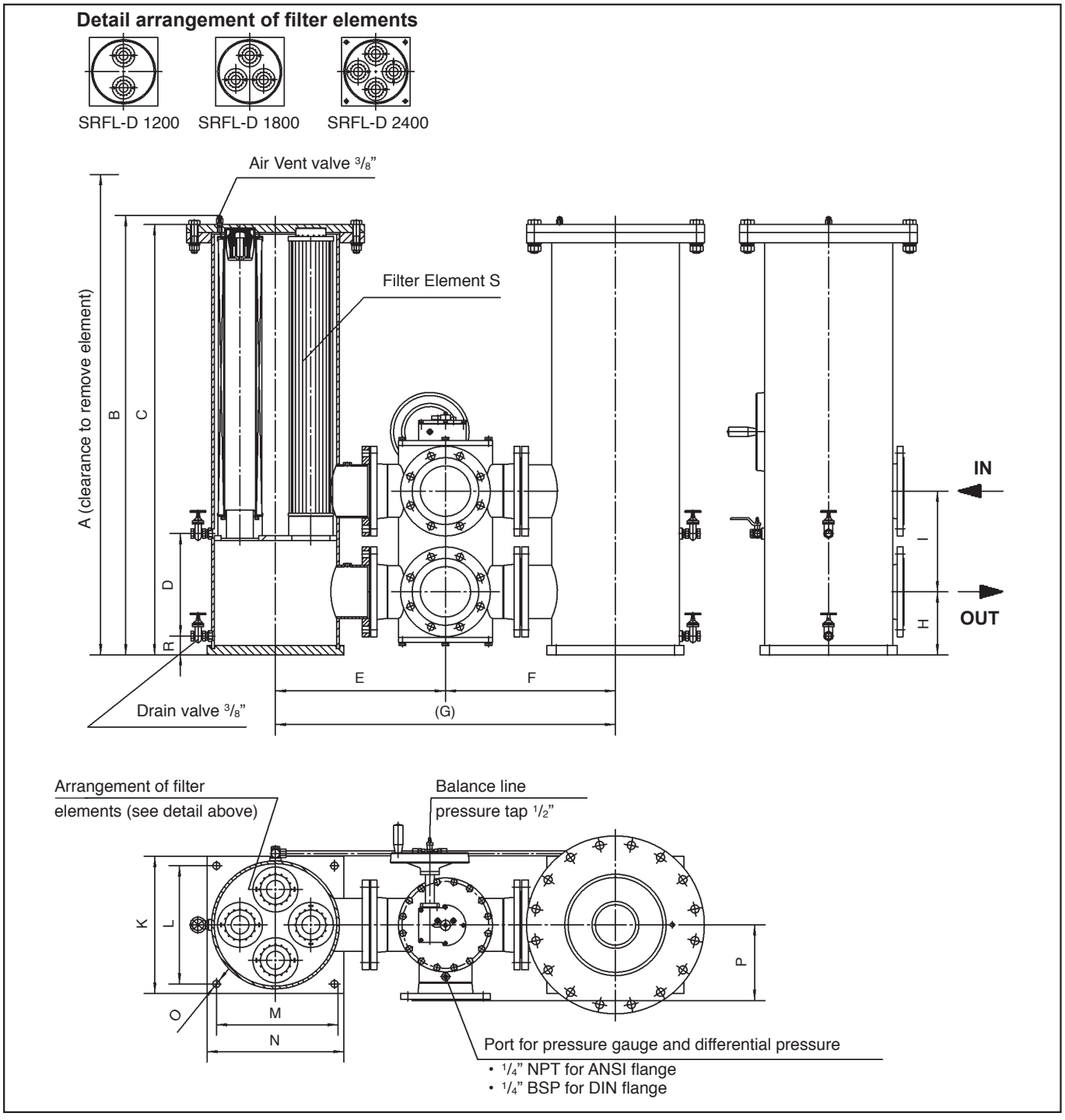

All dimensions in mm *(inch)*

Filter Size	Flange Connection		Dimensions																Total oil Capacity		Weight (without element)		Filter Element S	
	DIN	ANSI	A	B	C	D	E	F	G	H	I	K	L	M	N	O	P	R	l	gal	kg	lbs	Designation	Qty
SRFL-D-1200	DN 100	4"	2176,7 *(85,7)*	1319,6 *(51,96)*	1294,9 *(50,98)*	275 *(10,83)*	475 *(18,7)*	475 *(18,7)*	950 *(37,4)*	190 *(7,48)*	250 *(9,84)*	385 *(15,16)*	325 *(12,8)*	325 *(12,8)*	385 *(15,16)*	23 *(0,91)*	200 *(7,87)*	60 *(2,36)*	103	*27,2*	215	*475*	RE-600...	2 x 2
SRFL-D-1800	DN 125	5"	2176,7 *(85,7)*	1323,6 *(52,11)*	1294,9 *(50,98)*	275 *(10,83)*	500 *(19,69)*	500 *(19,69)*	1000 *(39,37)*	190 *(7,48)*	280 *(11,02)*	385 *(15,16)*	325 *(12,8)*	325 *(12,8)*	385 *(15,16)*	23 *(0,91)*	225 *(8,86)*	60 *(2,36)*	103	*27,2*	233	*515*	RE-600...	2 x 3
SRFL-D-2400	DN 150	6"	2249,1 *(88,55)*	1394,8 *(54,92)*	1366,1 *(53,78)*	325 *(12,8)*	540 *(21,26)*	540 *(21,26)*	1080 *(42,52)*	200 *(7,87)*	320 *(12,6)*	435 *(17,13)*	375 *(14,76)*	375 *(14,76)*	435 *(17,13)*	23 *(0,91)*	240 *(9,45)*	60 *(2,36)*	149	*39,3*	263	*580*	RE-600...	2 x 4

Dimensions SRFL- D 3600

Detail arrangement of filter elements

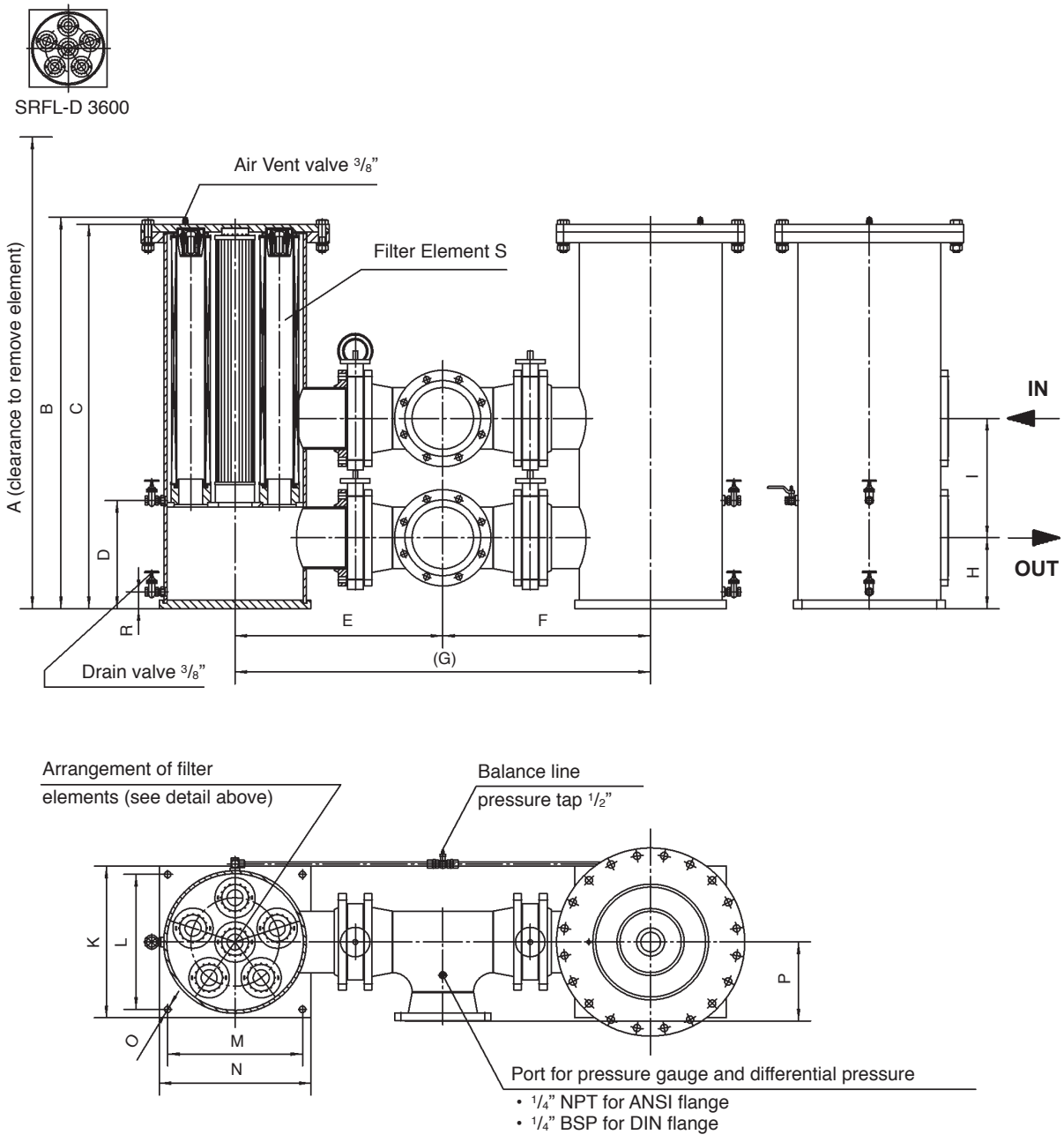

All dimensions in mm *(inch)*

Filter Size	Flange Connection		Dimensions																Total oil Capacity		Weight (without element)		Filter Element S	
	DIN	ANSI	A	B	C	D	E	F	G	H	I	K	L	M	N	O	P	R	l	gal	kg	lbs	Designation	Qty
SRFL-D-3600	DN 200	8”	2249,1 *(88,55)*	1392,8 *(54,84)*	1368,1 *(53,86)*	325 *(12,8)*	739 *(29,11)*	739 *(29,11)*	1479 *(58,22)*	252 *(9,92)*	425 *(16,73)*	540 *(21,26)*	480 *(18,9)*	480 *(18,9)*	540 *(21,26)*	23 *(0,91)*	281,4 *(11,08)*	60 *(2,36)*	233	*61,3*	390	*860*	RE-600...	2 x 6

Return Line Filter SRFL-S/D Ordering Code

Ordering Code Filter Housings

SRFL-D-160 ... B / A / O / CS / D /X

Filter type	
SRFL-S	Return Line Simplex Housing
SRFL-D	Return Line Duplex Housing

Group		
Size	Flow	
	l/min	*US GPM*
160	900	*240*
200	900	*240*
300	1400	*370*
1200	1400	*370*
1800	4000	*1050*
2400	4000	*1050*
3600	7000	*1850*

For complete filters:
Identification filter material + micron rating code (See ordering code filter elements below)

Seal material	
B	NBR (Buna®)
V	FPM (Viton®)
Other seal material on request	

Design code
Only for information

Clogging indicator	
O	Without clogging indicator
D	Differential pressure switch
Other indicators on request	

Material Housing	
CS	Carbon steel
SS	Stainless steel

Connection location	
O	Oposite side
S	Same side
Omit for SRFL-D series	

Connection style		Group							
Code	Connection style	160	200	300	600	1200	1800	2400	3600
A	ANSI flange	1-1/2"	2"	2-1/2"	3"	4"	5"	6"	8"
S	SAE flange (omit for SRFL-D)	1-1/2"	2"	2-1/2"	3"	4"	5"	6"	8"
D	DIN flange	DN 40	DN 50	DN 65	DN 80	DN 100	DN 125	DN 150	DN 200

Ordering Code Filter Elements

RE-160 G 10 V /X

Series	RE

Group			
Size	Filter Element		
	Designation	Quantity SRFL-S	Quantity SRFL-D
160	RE-160	1 x 1	2 x 1
200	RE-200	1 x 1	2 x 1
300	RE-300	1 x 1	2 x 1
600	RE-600	1 x 1	2 x 1
1200	RE-600	1 x 2	2 x 2
1800	RE-600	1 x 3	2 x 3
2400	RE-600	1 x 4	2 x 4
3600	RE-600	1 x 6	2 x 6

Filter material			Micron ratings available
Code	Material	max $\Delta p^*_{collapse}$	
A	Stainless fiber	30 bar *(435 PSI)*	03, 05, 10, 20
N	Filter paper	16 bar *(232 PSI)*	
G	Inorganic glass fiber	30 bar *(435 PSI)*	
S	Stainless mesh	30 bar *(435 PSI)*	10, 25, 50, 100, 200,500
*Collapse / burst resistance as per ISO 2941			

Design code
Only for information

Seal material	
B	NBR (Buna®)
V	FPM (Viton®)
Other seal materials on request	

Micron rating	
03	3 µm
05	5 µm
10	10 µm
20	20 µm
10	10 µm
25	25 µm
50	50 µm
100	100 µm
200	200 µm
500	500 µm
Other micron ratings on request	

1. Replacement Filter Elements RE

STAUFF replacement filter elements for SRFL-S and SRFL-D series filters are manufactured in the common filter materials such as stainless fiber, stainless mesh, paper and inorganic glass fiber. As standard all replacement elements series RE have tin plated steel parts for use with aggressive media such as water glycol, on request you also can get other materials. All replacement elements made by STAUFF comply with quality specifications in accordance with international standards.

RE-300 G 10 V /X

Series	RE

Group
According to filter housing (See ordering code page 9)

Design code
Only for information

Seal material	
B	NBR (Buna®)
V	FPM (Viton®)
other seal materials on request	

Filter material			Micron ratings available
Code	Material	max $\Delta p^*_{collapse}$	
A	Stainless fiber	30 bar *(435 PSI)*	03, 05, 10, 20
N	Filter paper	16 bar *(232 PSI)*	
G	Inorganic glass fiber	30 bar *(435 PSI)*	
S	Stainless mesh	30 bar *(435 PSI)*	10, 25, 50, 100, 200, 500
	*Collapse / burst resistance as per ISO 2941		

Micron rating	
03	3 µm
05	5 µm
10	10 µm
20	20 µm
10	10 µm
25	25 µm
50	50 µm
100	100 µm
200	200 µm
500	500 µm
Other micron ratings on request	

2. Differential Pressure Switch with visual gauge indicator

The switch is used to indicate when the elements need changing. The switch can turn on a light, shut down the machine or any further function controlled by an electrical signal. The gauge visually indicates the differential pressure across the filter elements.

Diameter	100 mm (6,9")
Scale	0 … 1,6 bar (0 … 23 PSI)
Connection thread	1/4 "
Working pressure	Max 200 bar (2900 PSI)
Temperature range	-20 °C up to +80 °C (-4 °F up to +176 °F)
Body	Aluminium
Lens	Glass
Seal	NBR (Buna-N ®) FPM (Viton ®)

Protection system	IP 65
Switch Voltage	max 28 V AC/DC
Current on Contact	max 0,25 A AC/DC
Contact Rating	5 VA AC/DC

Other data on request

Flow Characteristics of Return-line Filters SRFL-S and SRFL-D

The following characteristics are valid for mineral oils with a density of 0,85 kg/dm^3 and the kinematic viscosity of 30 mm^2/s. The characteristics have been determined in accordance to ISO 3968. The housing pressure drop is directly porportional to the oil density.

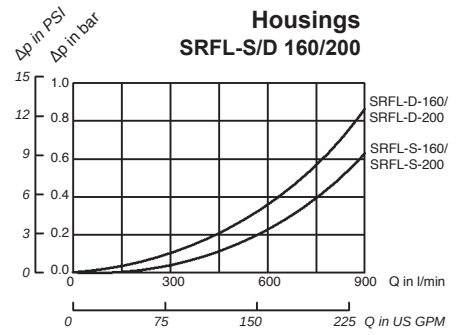

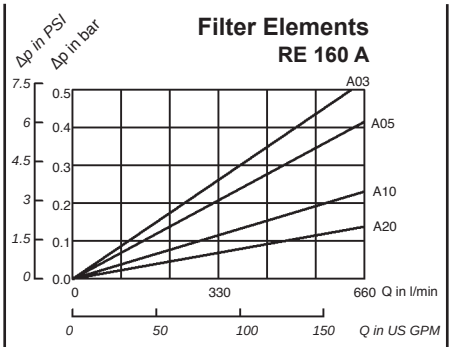

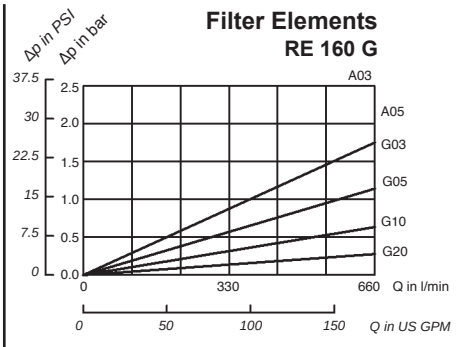

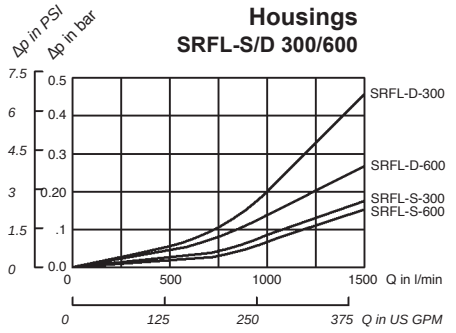

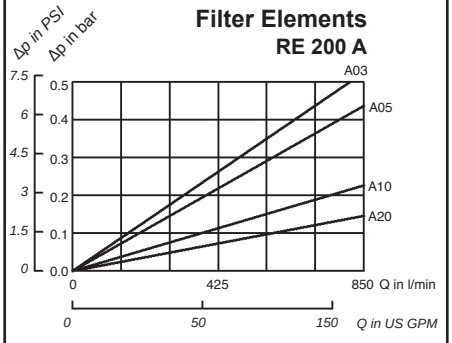

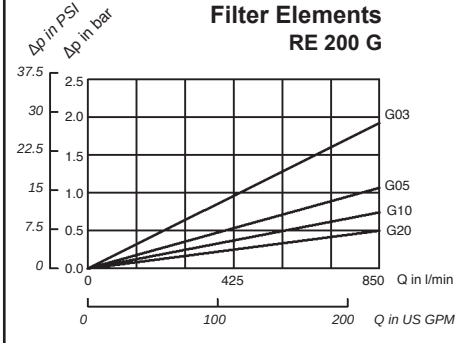

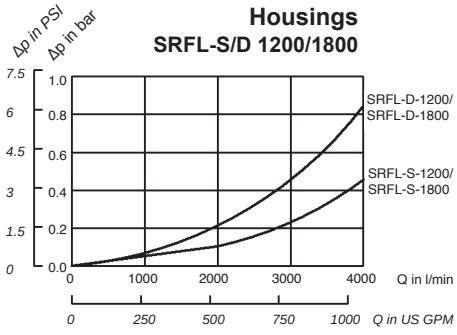

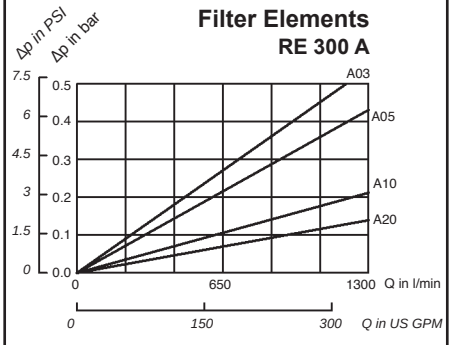

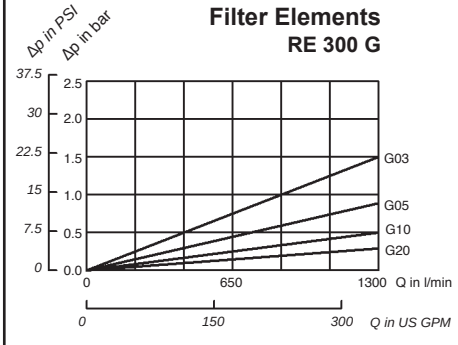

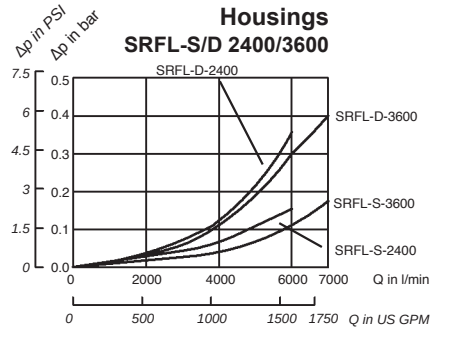

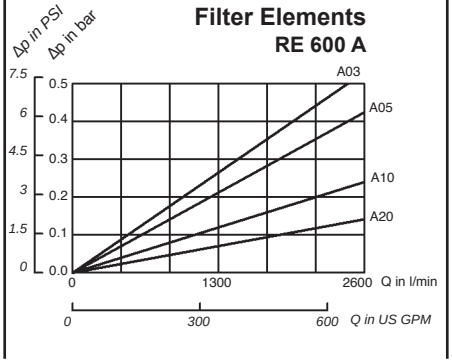

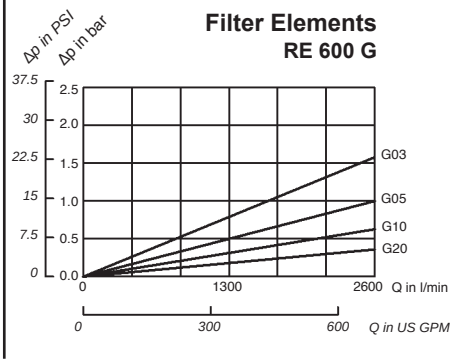

Pressure drop of housing including filter elements

General: $\Delta p_{total} = \Delta p_{hous} + \Delta p_{Elem}$ x (operating viscosity [mm²/s] / 30mm²/s)

with Δp_{hous} see diagrams above

Δp_{Elem} pressure drop of element at a flow **Q/n** (at a viscosity of 30 mm²/s) and n= numbers of elements as listed in ordering code filter elements see page 9) see diagrams above.

Example

Data given Q_{max} = 6000 l/min (*1585 US GPM*), RFL-D-2400 with filter elements RE-600S25B; operating viscosity = 100 mm²/s

Q_{max} = 6000 l/min;n=4 elements (SRFL-D-2400) Q/n=1500 l/min *(396 gal)*

Δp_{hous} 0,35 bar *(5,07 PSI)*, Δp_{Elem} =0,043 bar *(0,62 PSI)*

Pressure drop: Δp_{total} = 0,35 bar + 0,043 bar x (100 mm²/s / 30mm²/s)

= 0,49 bar *(7,16 PSI)*

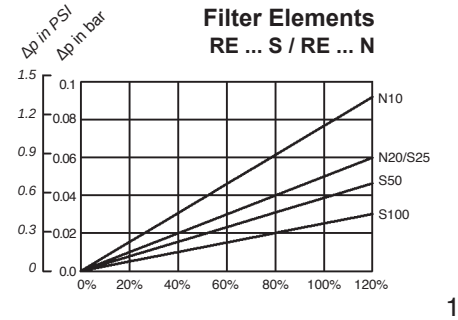

STAUFF®

FILTRATION TECHNOLOGY

2003

STAUFF

Return Line Filters RF & RFB

Quality and Service
Worldwide

Australia
Stauff Corporation (Pty.) Ltd.
P.O.Box 227 , 24-26 Doyle Avenue,
Unanderra Wollongong , N.S.W
2526 AUSTRALIA
Tel: +61 2 42 71 18 77
Fax: +61 2 42 71 84 32

Brazil
Stauff Brasil Ltda.
Av. Gupê 10767
Galpão 2 – Bloco A
Barueri – São Paulo – CEP 06422-120, BRAZIL
Tel: +55 (0)11-4789-9020
Fax: +55 (0)11-4789-9021

Canada
Stauff Canada Ltd.
866 Milner Avenue
Scarborough , Ontário M1B 5N7 , CANADA
Tel: +1 416 282 46 08
Fax: +1 416 282 30 39

China
Stauff International Trading (Shangai) Co., Ltd.
Shangdian Mansion, Pudong
331 , Binzhou Road
200126 Shangai, CHINA
Tel: +86 21 58 45 65 60
Fax: +86 21 58 45 66 80

France
Stauff S.A.
Z.I. de Vineuil-Blois Sud
230, Avenue du Grain d'Or
41354 Vineuil-cedex, FRANCE
Tel: +33 2 54 50 55 50
Fax: +33 2 54 42 29 19

India
Stauff India Pvt. Ltd.
Gat. No. 2340,
Pune-Nagar Road, Wagholi, INDIA
IND-Pune - 412027
Tel: +91 20 705 19 90
Fax: +91 20 705 19 89

Italy
Stauff Italia S.R.L.
Via Pola 21/23, I-20034
Birone di Giussano, ITALY
Tel: +39 0362 31 21 13
Fax: +39 0362 33 55 36

New Zealand
Stauff Corporation (NZ) Ltd.
Unit J. 150 Harris Road, P.O. Box 58517
Greenmount Auckland-NEW ZEALAND
Tel: +64 9 271 4812
Fax: +64 9 271 4832

United Kingdom
Stauff UK Ltd.
332, Coleford Road Darnall
Sheffield, S 9 5 P H, ENGLAND
Tel: +44 1142 518 518
Fax: +44 1142 518 519

USA
Stauff Corporation
7 Wm. Demarest Place
Waldwick, NJ – 07463, USA
Tel: +1 201 444 78 00
Fax: +1 201 444 78 52

Distributors and warehouses in all industrial countries.

Walter Stauffenberg GmbH & Co. KG

P. O. Box 1745 · D-58777 Werdohl
Im Ehrenfeld 4 · D-58791 Werdohl
Tel.: +49 (0) 2392 916-0
Fax: +49 (0) 2392 2505
E-mail: sales@stauff.com
Internet: http://www.stauff.com

Stauff Filtration Technology

Stauff Filtration Technology offers a complete range of filtration products and services that will provide the system designer or user with the highest level of contamination control demanded by today's most sophisticated applications. Products include pressure filters, return line filters, elements, spin on filters suction strainers, and filler breathers for various hydraulic, lubrication and fuel oils.

Stauff has the technical expertise to provide superior filter element designs for the Stauff original filter housings and also for the interchange element market. Stauff manufactures more than 10,000 different elements. Many of these are designed to fit into filter housings produced by other companies while maintaining or surpassing the original performance.

The "Stauff Contamination Control Program" includes the diagnostic services including fluid sampling and laser particle counting products needed to monitor the system contamination level.

Stauff, through its global network of wholly owned companies and technically qualified distributors, is ideally placed to assist its customers in the total contamination process providing a well balanced filtration solution.

Technical Data

STAUFF RF 014-130 return line filters are designed as tank top filters. They are mounted directly on the tank top and if 100% of the system oil is filtered, they provide the optimum removal of contaminant from the system. This provides the pump with clean oil thus reducing contaminant generated wear. The filter bowl or funnel is designed to return the oil beneath the surface thus preventing the entraiment of air by the returning oil.

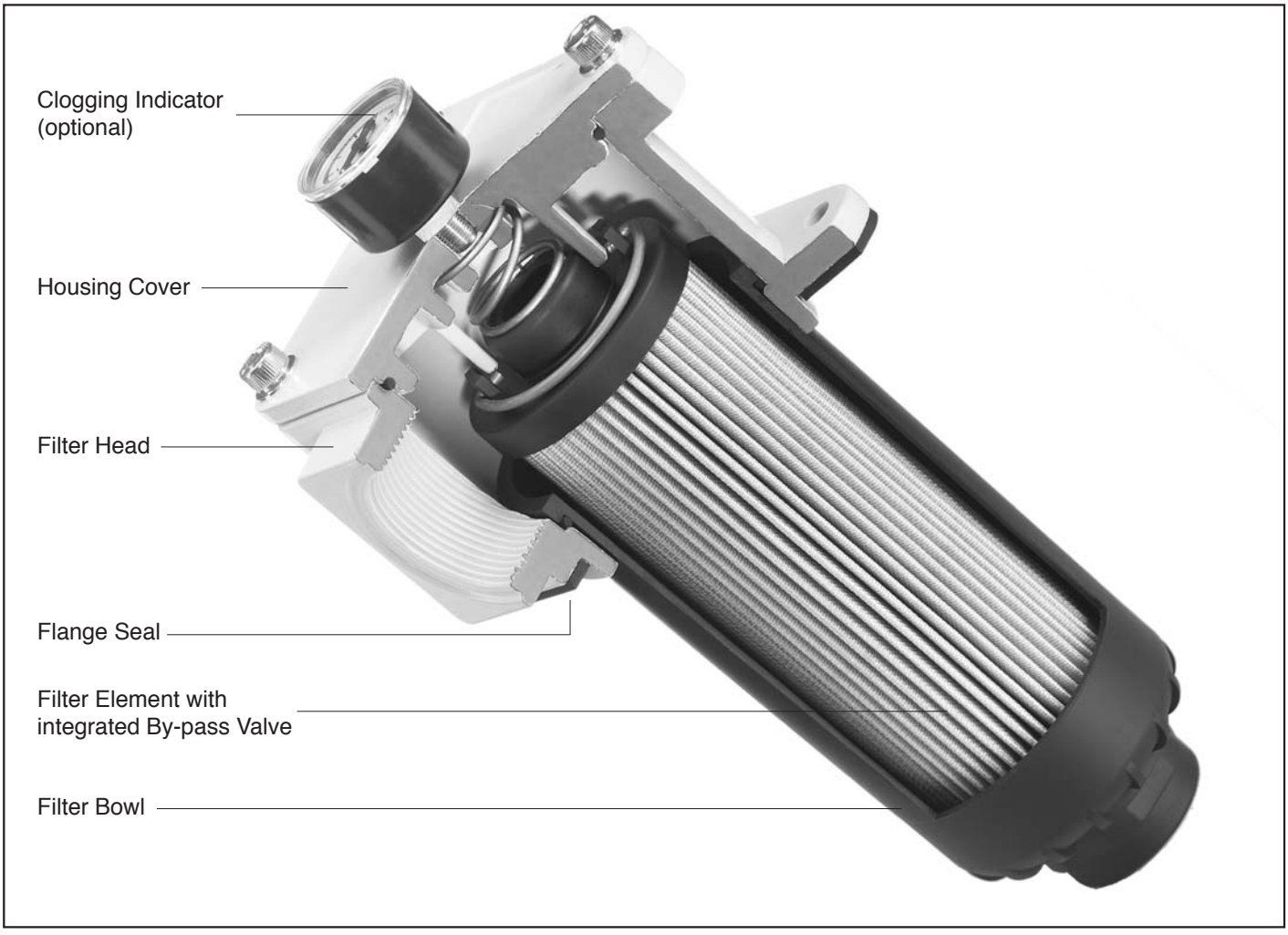

Technical Specification

Construction	Tank Top flange mounting
Filter head	Aluminium
Filter bowl	Glass fiber reinforced polyamide
Seals	NBR (Buna-N®), FPM (Viton®) or EPDM (Ethylene-Propylene)
Threaded connection	BSP, NPT- and SAE-"O"-Ring thread as well as SAE-flange *(3000 PSI)*
Operating pressure	max 16 bar *(232 PSI)*
Proof pressure	24 bar *(350 PSI)*
Temperature Range	-10 to +100°C *(14° to 212ºF)*

By-pass valve (integrated in the filter element)	Opening pressure 3 bar ± 0,3 bar *(43,5 PSI ± 4,35 PSI)* other pressures on request
Clogging indicator	Gauge type indicator 0…4 bar *(0…58 PSI)* coloured segments; Electrical switch, setting 2,5 bar *(36,25 PSI)*
Filter elements	Specification see page 14
Media	Mineral oils, other fluids on request

Return Line Filters RF 014-130 Dimensions

Dimensions RF 014-130

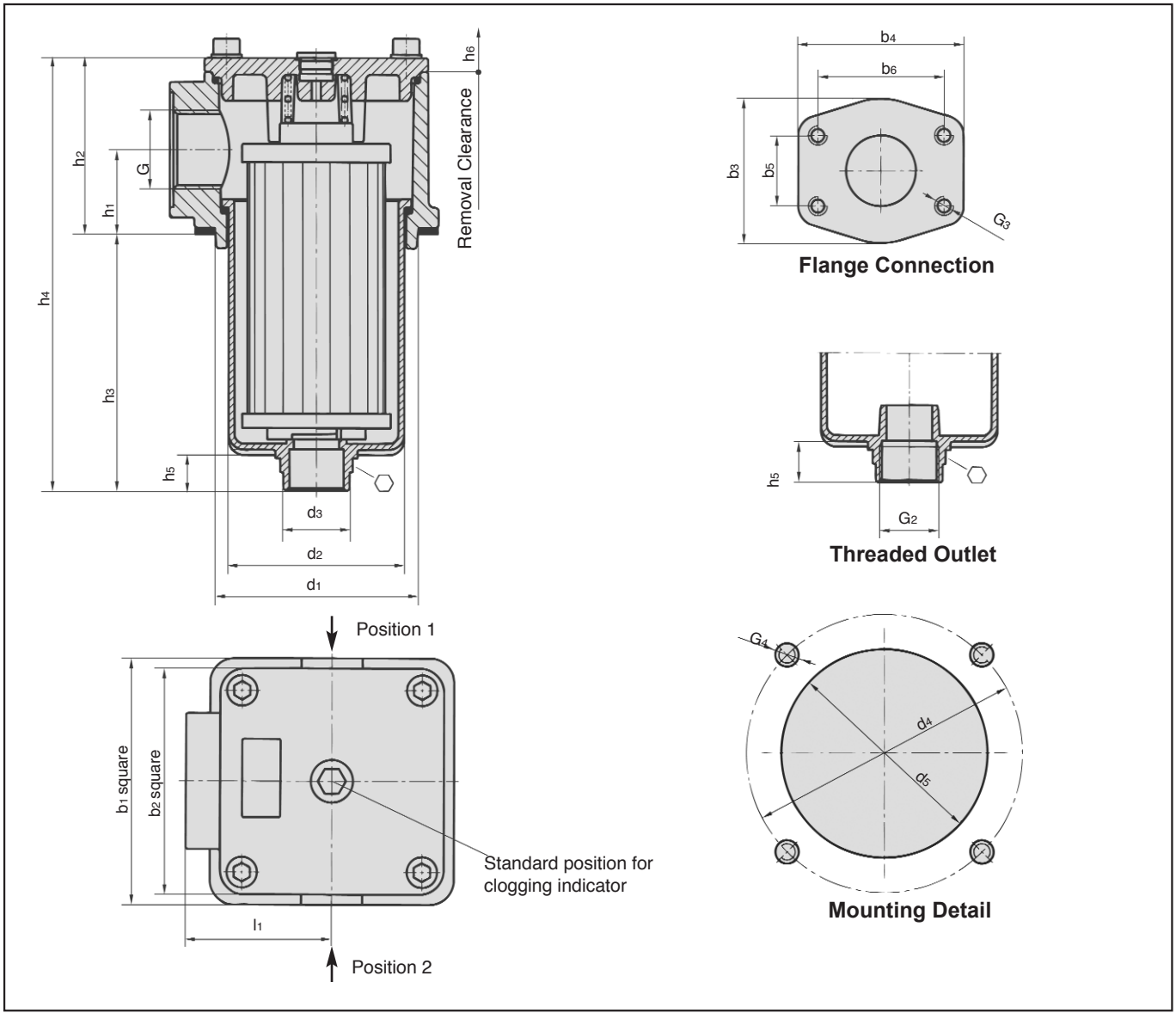

Dimensions Return Line Filters

All dimensions in mm *(inch)*

Filter Size	Thread connection G: BSP	NPT	SAE-"O" Ring Thread	SAE-Flange *3000 PSI*	Dimensions: b_1	b_2	b_3	b_4	b_5	b_6	d_1	d_2	d_3	d_4	d_5	h_1	h_2	h_3	h_4	h_5	h_6	l_1	G_2	G_3	G_4
RF 014	G 3/4	3/4"	1 1/16-12 UN	-	89 (3,504)	80 (3,15)					73 (2,874)	57,5 (2,264)	36 (1,417)	100 (3,937)	78 (3,071)	33 (1,3)	66 (2,598)	91,5 (3,602)	157,5 (6,201)	23,5 (0,925)	140 (5,512)	48 (1,89)	G1 or 1" NPT		M6 or 1/4" UNC
RF 030	G 1	1"	1 5/16-12 UN															159,5 (6,295)	225,5 (8,878)		210 (8,268)				
RF 045	G 1 1/4	1 1/4"	1 5/8-12 UN	-	120 (4,724)	110 (4,331)					100 (3,937)	84 (3,307)	48 (1,89)	135 (5,135)	105 (4,134)	41 (1,614)	86 (3,386)	119 (4,685)	206 (8,11)	24 (0,945)	180 (7,087)	66 (2,598)	G1 1/4 or 1 1/4" NPT		M8 or 5/16" UNC
RF 070	G 1 1/2	1 1/2"	1 7/8-12 UN															180 (7,087)	267 (10,512)		240 (9,449)				
RF 090	G 2	2"	1 7/8-12 UN	2"	150 (5,906)	135 (5,135)	88 (3,465)	102 (4,016)	42,9 (1,689)	77,8 (3,063)	126 (4,961)	112,5 (4,429)	54,5 (2,146)	170 (6,693)	131 (5,158)	47 (1,85)	98 (3,858)	172,5 (6,791)	273,5 (10,768)	27 (1,063)	235 (9,252)	85 (3,347)	G1 1/2 or 1 1/2" NPT	1/2 UNC x15 (x0,591)	M10 or 3/8" UNC
RF 130	G 2	2"	1 7/8-12 UN															252,5 (9,491)	353,5 (13,917)		315 (12,402)				

Options RF 014-130

1. Visual clogging indicator

The gauge visually displays the degree of contamination of the element. The coloured segments allow quick visual checking.

green	0...2,5	bar *(0…36,25 PSI)*	Element has service life left
yellow	2,5...3,0	bar *(36,25 ...43,5 PSI)*	Element is contaminated and should be changed
red	>3,0	bar *(>43,5 PSI)*	By-pass valve open, unfiltered oil passing to tank

Visual clogging indicator

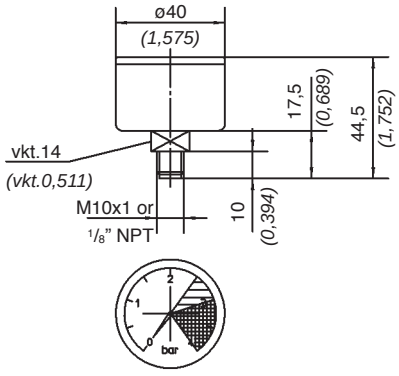

2. Electrical clogging switch

The switch is used where an electrical signal is needed to indicate when the element needs changing. The switch can turn on a light, or shut the machine down, or any further function controlled by an electric signal. The switching pressure is 2,5 bar *(36,25 PSI)* and this allows the element to be changed before the by-pass setting of 3 bar *(43,5 PSI)* is reached.

Maximum Voltage	Switch Type
42 V	G 42
110 V	G 110
220 V	G 220

Electrical Clogging Switch

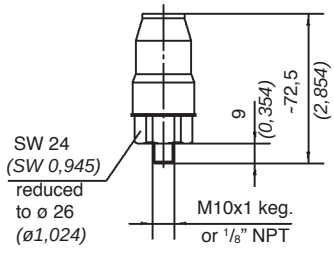

3. Leakage oil connection

Seal or case drain lines can be connected to the filter through either of the clogging indicator ports providing that the leakage oil can accept a pressure of 3 bar *(43,5 PSI).* It ensures that no un-filtered oil can return to the reservoir. It may save the cost of a manifold.

Leakage oil connection

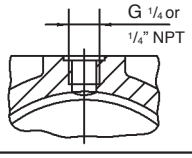

4. Filter bowl with threaded connection

Under some circumstances such as a tall reservoir or one with oil levels which vary greatly during operation, it is necessary to extend the filter bowl so that the returning oil returns beneath the surface and does not entrain air in the process. The optional bowl with a female thread allows an extension to be fitted quite simply.

Threaded outlet

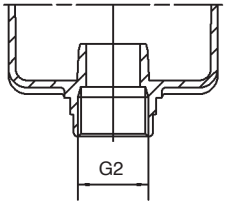

Dimension G2 see table page 4

5. Filter bowl with threaded connection and diffusor

Diffusers mounted to the filter bowl minimize foaming and reduce noise of backstreaming fluids. For further details on STAUFF diffusers please refer to our catalogue “Hydraulic Accessories”.

Threaded outlet with SRV

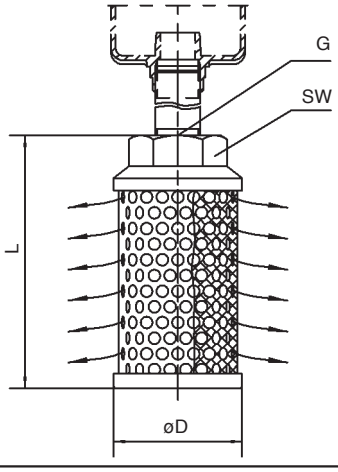

All dimensions in mm *(inch)*

Size SRV	for Return Line Filter Size	Dimensions			
		ø D	L	Thread G	SW
SRV-114-B16	RF 014/030	60 *(2,362)*	139 *(5,472)*	G1 or 1” NPT	46 *(1,811)*
SRV-200-B20	RF 045/070	82 *(3,228)*	139 *(5,472)*	G1 1/4 or 1 1/4” NPT	60 *(2,362)*
SRV-227-B24	RF 090/130	82 *(3,228)*	200 *(7,874)*	G1 1/2 or 1 1/2” NPT	60 *(2,362)*

Return Line Filter RF 014-130 Ordering Code

Ordering Code Filter Housings

RF 070 ... B / B / M / G / L1 /X

Filter type	RF

Group		
Size	Flow	
	l/min	GPM
014	60	14
030	110	30
045	160	45
070	240	70
090	330	90
130	500	130

* Note Exact flow will depend on filter element selected. Consult technical data on page 7 & 8

For complete filters:
identification filter material + micron rating code (see ordering code filter elements below)

Seal material	
B	NBR (Buna®)
V	FPM (Viton®)
E	EPDM
other seal material on request	

Design Code
only for information

Additional Features		Pos.*	
L	Leakage oil connection	1	2

*) position of leakage oil connection see page 4
without any code: assembly in the middle of the filter cover

Outlet Style	
O	Standard outlet (without thread)
G	Filter bowl with threaded outlet

Clogging indicator (see page 5)		Pos.*	
M	Pressure gauge	1	2
G 42	Electrical switch 42 V		
G 110	Electrical switch 110 V		
G 220	Electrical switch 220 V		

*) position of clogging indicator see page 4
without any code: assembly in the middle of the filter cover

Connection style		Group					
Code	Connection style	014	030	045	070	090	130
B	BSP	G3/4	G1	G1 1/4	G1 1/2	G2	G2
B 1	BSP	G1/2	G1/2	G1 1/2	G1 1/4	G1 1/4	G1 1/4
B 2	BSP	G1	G3/4	–	–	G1 1/2	G1 1/2
N	NPT	3/4"	1"	1 1/4"	1 1/2"	2"	2"
N 1	NPT	1"	3/4"	1 1/2"	1 1/4"	1 1/2"	1 1/2"
U	SAE-"O"-Ring thread	1 1/16	1 5/16	1 5/8	1 7/8	1 7/8	1 7/8
U 1	SAE-"O"-Ring thread	1 5/16	1 1/16	1 7/8	1 5/8	1 5/8	1 5/8
F	SAE-flange *(3000 PSI)*	–	–	–	–	2"	2"

Flanges are not supplied.

Ordering Code Filter Elements

RE-014 G 10 V /X

Series	RE

Group
according to filter housing

Design code
only for information

Seal material	
B	NBR (Buna®)
V	FPM (Viton®)
E	EPDM
other seal materials on request	

Filter material			Micron ratings available
Code	Material	max $\Delta p^*_{collapse}$	
A	Stainless fiber	30 bar *(435 PSI)*	03, 05, 10, 20
N	Filter paper	16 bar *(232 PSI)*	
G	Inorganic glass fiber	30 bar *(435 PSI)*	
B, **S**	Stainless mesh	30 bar *(435 PSI)*	10, 25, 50, 100, 200,500

*collapse / burst resistance as per ISO 2941

Bold type identifies preferred material

Micron rating	
03	3 µm
05	5 µm
10	10 µm
20	20 µm
10	10 µm
25	25 µm
50	50 µm
100	100 µm
200	200 µm
500	500 µm
other micron ratings on request	

Flow Characteristics of Return Line Filters RF 014-130

The following characteristics are valid for mineral oils with a density of 0,85 kg/dm³ and the kinematic viscosity of 30 mm²/s. The characteristics have been determined in accordance to ISO 3968.

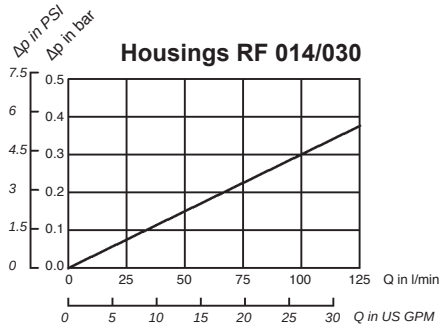

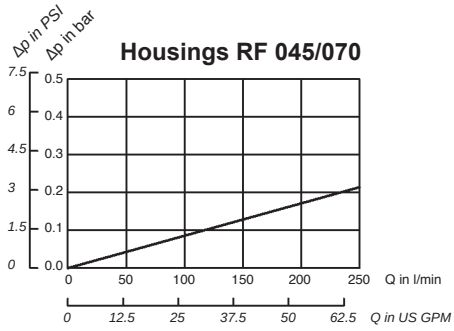

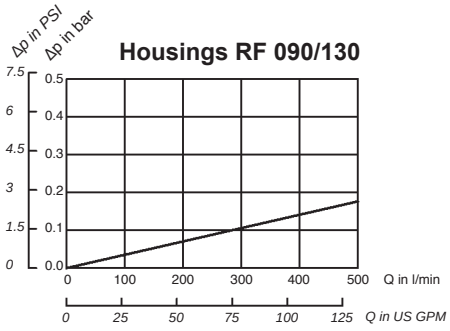

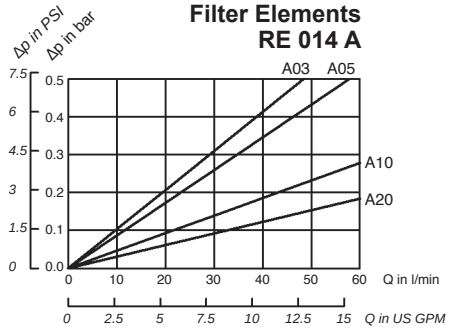

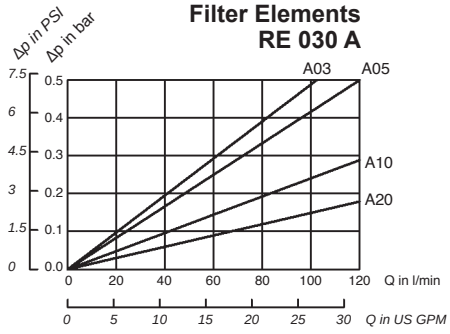

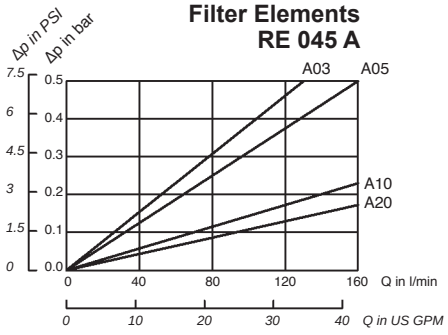

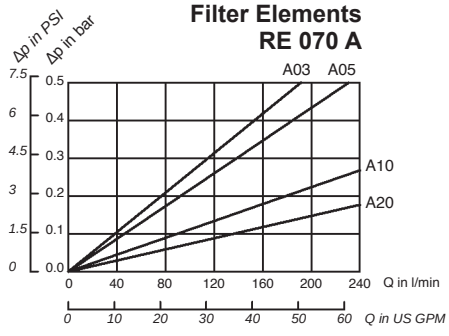

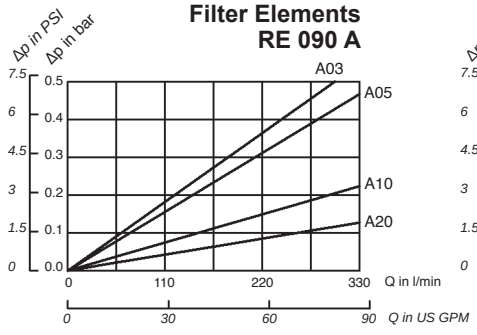

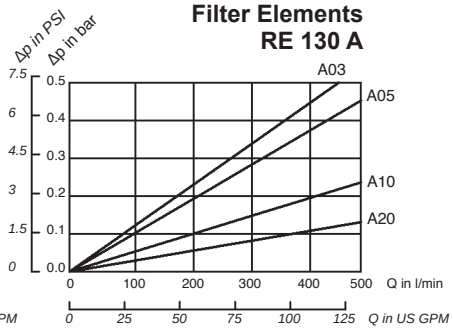

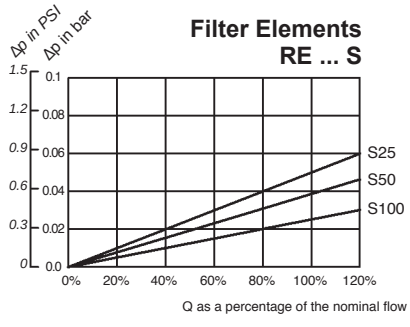

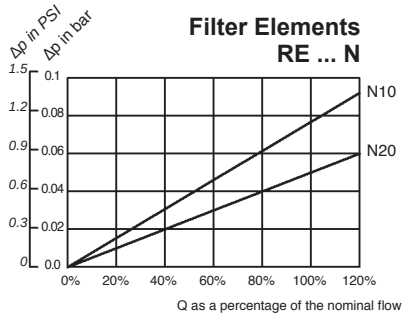

NEXT

Flow Characteristics of Return Line Filters RF 014-130

The following characteristics are valid for mineral oils with a density of 0,85 kg/dm³ and the kinematic viscosity of 30mm²/s . The characteristics have been determined in accordance to ISO 3968.

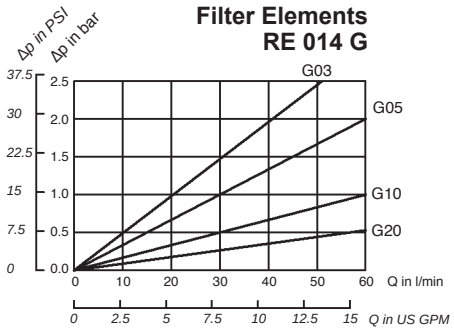

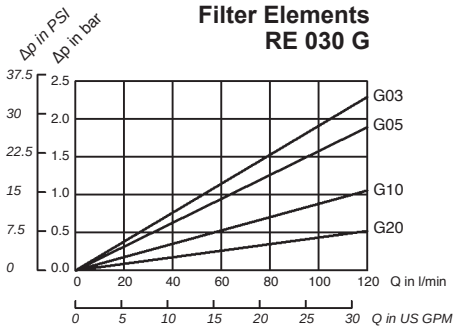

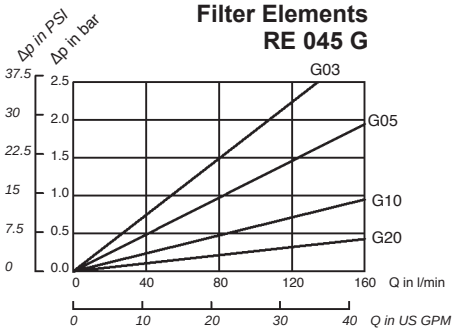

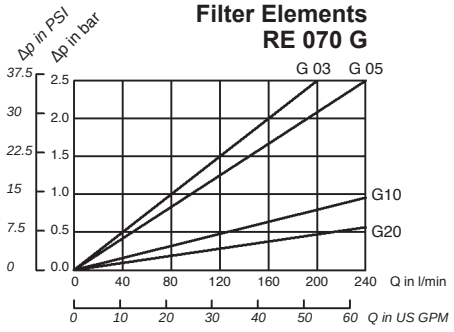

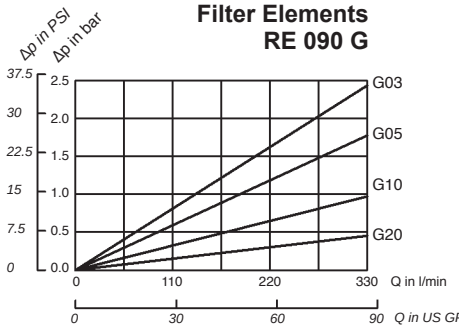

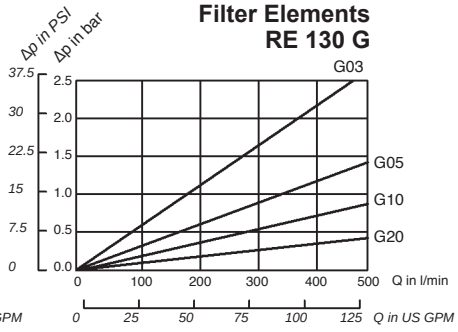

Technical Data

STAUFF RFB return line filters are designed as tank top filters. They are mounted directly on the tank top and if 100% of the system oil is filtered they provide the optimum removal of contaminant from the system. This provides the pump with clean oil thus reducing contaminant generated wear. Because of it's low weight and compact design the STAUFF filters RFB are optimally suitable in mobile hydraulic applications.

Technical Specification

Construction	Tank Top flange mounting
Filter head	Aluminium
Filter bowl	Glass fiber reinforced polyamide
Seals	NBR (Buna-N®), FPM (Viton®) or EPDM (Ethylene-Propylene)
Threaded connection	BSP, NPT- and SAE-"O"-Ring thread
Operating pressure	max 10 bar *(145 PSI)*
Proof pressure	24 bar *(350 PSI)*
Temperature range	-10° up to +100°C *(14° up to 212°F)*
By-pass valve (integrated in the filter element)	Opening pressure 3 bar ± 0,3 bar *(43,5 PSI ± 4,35 PSI)* other pressures on request
Clogging indicator	Gauge type indicator 0…4 bar *(0…58 PSI)* coloured segments; Electrical switch, setting 2,5 bar *(36,25 PSI)*
Filter elements	Specification see page 14
Media	Mineral oils, other fluids on request

Return Line Filter RFB 022-052 Dimensions

Dimensions RFB 022-052

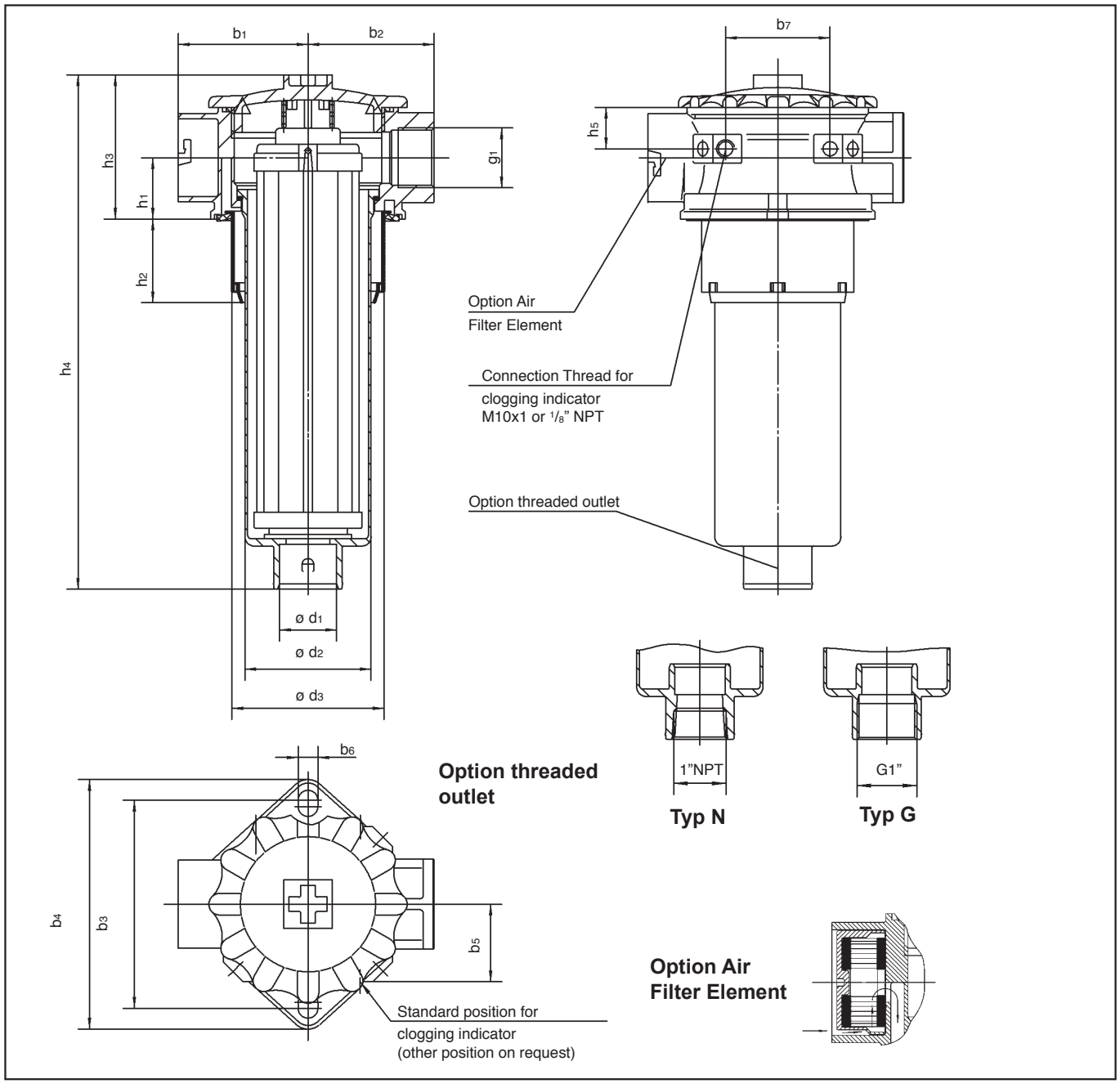

Dimensions Return Line Filter RFB 022/046/052

All dimensions in mm *(inch)*

Filter Size	Thread connection G			h_1	h_2	h_3	h_4	h_5	d_1	d_2	d_3	b_1	b_2	b_3	b_4	b_5	b_6	b_7
	BSP	NPT	SAE-"O"-Ring thread															
RFB 022	G 3/4	3/4"	1-5/16-12 UN	34 (1,339)	46,5 (1,831)	80 (3,15)	205,5 (7,933)	23 (0,906)	32 (1,26)	70 (2,756)	84,5 (3,327)	72 (2,835)	70 (2,756)	115,5 (4,547)	138,5 (5,453)	43 (1,693)	11 (0,433)	58 (2,284)
	G1	1"																
RFB 046	G 3/4	3/4"					285,5 (11,24)											
	G1	1"																
RFB 052	G 3/4	3/4"					351,5 (13,839)											
	G1	1"																

Options

1. Visual clogging indicator

The gauge visually displays the degree of contamination of the element. The coloured segments allow quick visual checking.

green	0...2,5	bar *(0…36,25 PSI)*	Element has service life left
yellow	2,5...3,0	bar *(36,25 ...43,5 PSI)*	Element is contaminated and should be changed
red	>3,0	bar *(43,5 PSI)*	By-pass valve open, unfiltered oil passing to tank

Visual clogging indicator

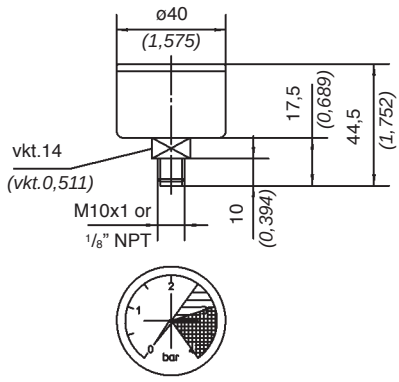

2. Electrical clogging switch

The switch is used where an electrical signal is needed to indicate when the element needs changing. The switch can turn on a light, or shut the machine down, or any further function controlled by an electric signal. The switching pressure is 2,5 bar *(36,25 PSI)* and this allows the element to be changed before the by-pass setting of 3 bar *(43,5 PSI)* is reached.

Maximum Voltage	Switch Type
42 V	G 42
110 V	G 110
220 V	G 220

Electrical Clogging Switch

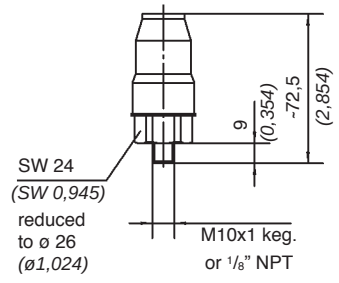

3. Air Filter Element

Allows an effective filtration of the incoming air which avoids the infiltration of dirt particles into the hydraulic system. The standard air filter element is micron filter paper, other materials and micron ratings on request.

Air Filter

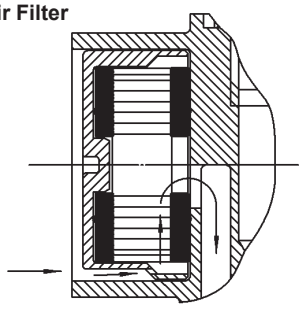

4. Filter bowl with threaded connection

Under some circumstances such as a tall reservoir or one with oil levels which vary greatly during operation, it is necessary to extend the filter bowl so that the returning oil returns beneath the surface and does not entrain air in the process. The optional bowl with a female thread allows an extension to be fitted quite simply.

Outlet

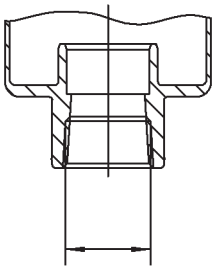

Dimension see page 10

Return Line Filter RFB 022-052 Ordering Code

Ordering Code Filter Housings

RFB 022 ... B / B / M / G / L10 /X

Filter type	RFB

Group

Size	Flow l/min	Flow GPM
022	75	22
046	165	46
052	185	52

Exact flow will depend on filter element selected, consult technical data on page 13

For complete filters:
identification filter material + micron rating code
(see ordering code filter elements below)

Seal material

B	NBR (Buna®)
V	FPM (Viton®)
E	EPDM

other seal material on request

Design Code
only for information

Air filter element

	without air filter element
L 10	10 micron filter paper

other materials and micron ratings on request

Outlet

O	without thread (standard)
N	with thread 1” NPT
G	with thread 1” BSP

Clogging indicator

M	Pressure gauge
G 42	Electrical switch 42 V
G 110	Electrical switch 110 V
G 220	Electrical switch 220 V

Connection style

Code	Connection Style	Group 022	Group 046	Group 052
B	BSP	G 1		
B1	BSP	G 3/4		
N	NPT	1”		
N1	NPT	3/4”		
U	SAE - “O”-Ring Thread	1-5/16-12 UN		

Ordering Code Filter Elements

RE-046 G 10 V /X

Series	RE

Group
according to filter housing

Filter material

Code	Material	max $\Delta p^*_{collapse}$	Micron ratings available
A	Stainless fiber	30 bar *(435 PSI)*	03, 05, 10, 20
N	Filter paper	16 bar *(232 PSI)*	
G	Inorganic glass fiber	30 bar *(435 PSI)*	
S	Stainless mesh	30 bar *(435 PSI)*	10, 25, 50, 100, 200,500

*collapse / burst resistance as per ISO 2941

Design Code
only for information

Seal material

B	NBR (Buna®)
V	FPM (Viton®)
E	EPDM

other seal materials on request

Micron rating

03	3 µm
05	5 µm
10	10 µm
20	20 µm
10	10 µm
25	25 µm
50	50 µm
100	100 µm
200	200 µm
500	500 µm

other micron ratings on request

Ordering Code Air Filter Element

REA-046 L 10 B /X

Series	RE

Group
air filter for RFB 022/046/052

Filter material

L	Filter paper

other micron ratings on request

Design Code
only for information

Micron rating

10	10 µm

other micron ratings on request

Flow Characteristics of Return Line Filters RFB 022-052

The following characteristics are valid for mineral oils with a density of 0,85 kg/dm³ and the kinematic viscosity of 30 mm²/s. The characteristics have been determined in accordance to ISO 3968.

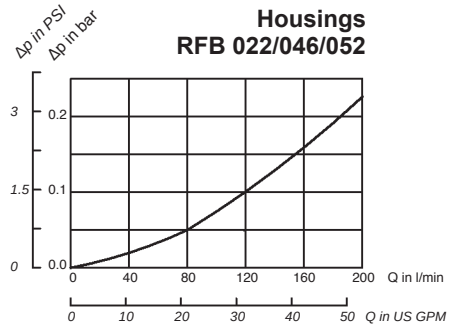

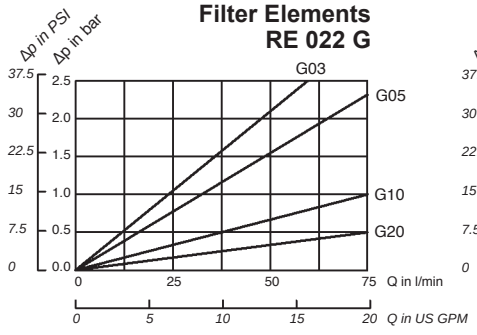

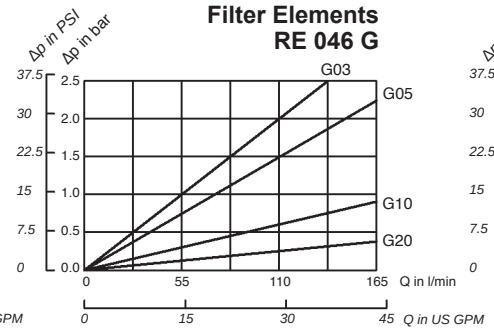

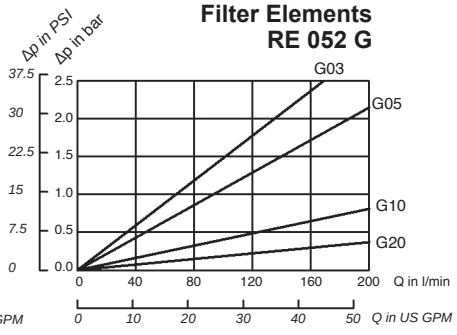

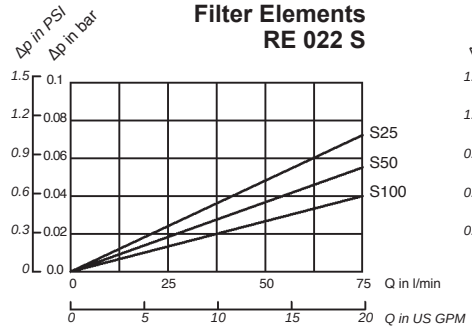

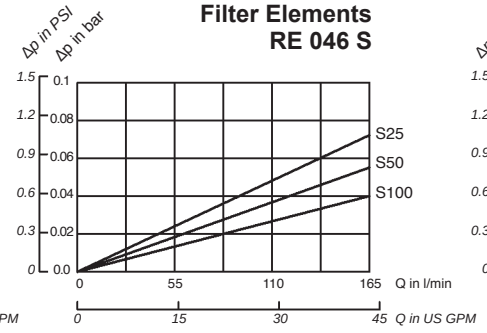

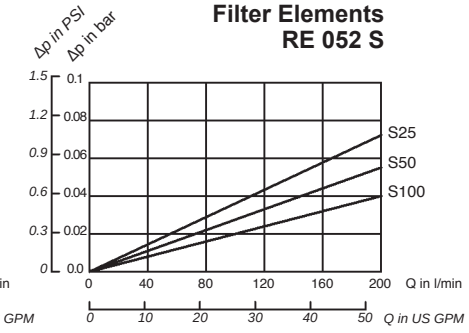

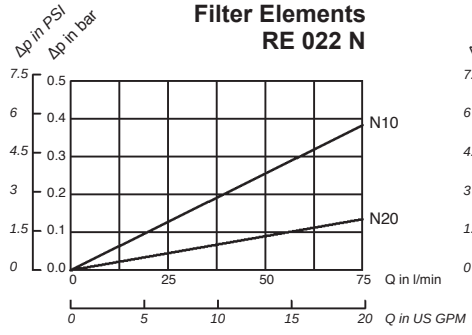

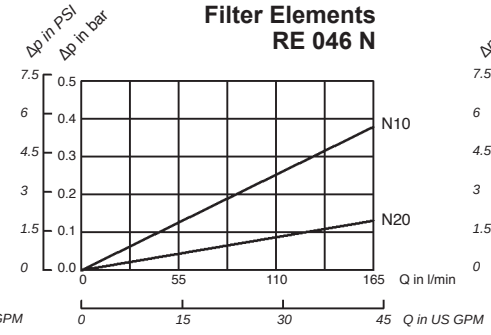

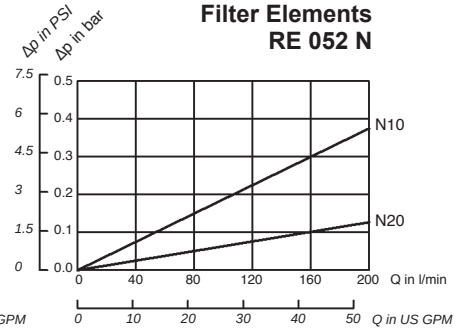

Replacement Filter Elements for RF and RFB series

STAUFF replacement filter elements for RF and RFB series filters are manufactured in the common filter materials such as stainless fiber, stainless mesh, paper and inorganic glass fiber. As standard all replacement elements series RF and RFB have tin plated steel parts for use with aggressive media such as water glycol, other materials available upon request. All STAUFF replacement elements comply with quality specifications in accordance with international standards.

RE-014 G 10 V /X

Series	RE

Group
according to filter housing

Filter material			Micron ratings available
Code	Material	max $\Delta p^*_{collapse}$	
A	Stainless fiber	30 bar *(435 PSI)*	03, 05, 10, 20
N	Filter paper	30 bar *(435 PSI)*	
G	Inorganic glass fiber	30 bar *(435 PSI)*	
B, **S**	Stainless mesh (type B not for RE-022/046/065)	30 bar *(435 PSI)*	10, 25, 50, 100, 200, 500
*collapse / burst resistance as per ISO 2941			

Bold type identifies preferred material

Design Code
only for information

Seal material	
B	NBR (Buna®)
V	FPM (Viton®)
E	EPDM
other seal materials on request	

Micron rating	
03	3 µm
05	5 µm
10	10 µm
20	20 µm
10	10 µm
25	25 µm
50	50 µm
100	100 µm
200	200 µm
500	500 µm
other micron ratings on request	

STAUFF®

FILTRATION TECHNOLOGY

2003

STAUFF

Return Line Filters RTF

Quality and Service
Worldwide

Australia
Stauff Corporation (Pty.) Ltd.
P.O.Box 227 , 24-26 Doyle Avenue,
Unanderra Wollongong , N.S.W
2526 AUSTRALIA
Tel: +61 2 42 71 18 77
Fax: +61 2 42 71 84 32

Brazil
Stauff Brasil Ltda.
Av. Gupê 10767
Galpão 2 – Bloco A
Barueri – São Paulo – CEP 06422-120, BRAZIL
Tel: +55 (0)11-4789-9020
Fax: +55 (0)11-4789-9021

Canada
Stauff Canada Ltd.
866 Milner Avenue
Scarborough , Ontário M1B 5N7 , CANADA
Tel: +1 416 282 46 08
Fax: +1 416 282 30 39

China
Stauff International Trading (Shangai) Co., Ltd.
Shangdian Mansion, Pudong
331 , Binzhou Road
200126 Shangai, CHINA
Tel: +86 21 58 45 65 60
Fax: +86 21 58 45 66 80

France
Stauff S.A.
Z.I. de Vineuil-Blois Sud
230, Avenue du Grain d'Or
41354 Vineuil-cedex, FRANCE
Tel: +33 2 54 50 55 50
Fax: +33 2 54 42 29 19

India
Stauff India Pvt. Ltd.
Gat. No. 2340,
Pune-Nagar Road, Wagholi, INDIA
IND-Pune - 412027
Tel: +91 20 705 19 90
Fax: +91 20 705 19 89

Italy
Stauff Italia S.R.L.
Via Pola 21/23, I-20034
Birone di Giussano, ITALY
Tel: +39 0362 31 21 13
Fax: +39 0362 33 55 36

New Zealand
Stauff Corporation (NZ) Ltd.
Unit J. 150 Harris Road, P.O. Box 58517
Greenmount Auckland-NEW ZEALAND
Tel: +64 9 271 4812
Fax: +64 9 271 4832

United Kingdom
Stauff UK Ltd.
332, Coleford Road Darnall
Sheffield, S 9 5 P H, ENGLAND
Tel: +44 1142 518 518
Fax: +44 1142 518 519

USA
Stauff Corporation
7 Wm. Demarest Place
Waldwick, NJ – 07463, USA
Tel: +1 201 444 78 00
Fax: +1 201 444 78 52

Distributors and warehouses in all industrial countries.

Walter Stauffenberg GmbH & Co. KG

P. O. Box 17 45 · D-58777 Werdohl
Im Ehrenfeld 4 · D-58791 Werdohl
Tel.: +49 (0) 23 92 9 16-0
Fax: +49 (0) 23 92 25 05
E-mail: sales@stauff.com
Internet: http://www.stauff.com

Stauff Filtration Technology

Stauff Filtration Technology offers a complete range of filtration products and services that will provide the system designer or user with the highest level of contamination control demanded by today's most sophisticated applications. Products include pressure filters, return line filters, elements, spin on filters suction strainers, and filler breathers for various hydraulic, lubrication and fuel oils.

Stauff has the technical expertise to provide superior filter element designs for the Stauff original filter housings and also for the interchange element market. Stauff manufactures more than 10,000 different elements. Many of these are designed to fit into filter housings produced by other companies while maintaining or surpassing the original performance.

The "Stauff Contamination Control Program" includes the diagnostic services including fluid sampling and laser particle counting products needed to monitor the system contamination level.

Stauff, through its global network of wholly owned companies and technically qualified distributors, is ideally placed to assist its customers in the total contamination process providing a well balanced filtration solution.

Return Line Filter RTF 10/25 Technical Data

Technical Data

STAUFF RTF 10/25 series return filters are designed for in-tank hydraulic applications with a maximum operating pressure of 3.4 bar *(50 PSI)*.

Technical Specification

Construction	In-line assembly
Filter head	Die cast aluminum
Element bowl	Polyamide
Seals	"O"-Rings NBR (Buna-N®), FPM (Viton®)
Port connections	BSP, NPT, SAE-"O"-Ring thread
Flow rating	up to 95 l/min *(25 US GPM)* for 32 cSt *(150 SUS)* fluids
Operating Pressure	max 3,4 bar *(50 PSI)*
Test pressure	min 6,8 bar *(100 PSI)*
Temperature range	-25ºC to +100ºC *(-13°F to 212ºF)*
By-pass valve (integrated in the filter element)	Allows unfiltered oil to by-pass the contaminated element once the opening pressure has been reached Opening pressure 1.7 bar *(25 PSI)*
Clogging indicators	Gage indicator 0-6.9 bar *(0-100 PSI)* with coloured segments; Electrical, 0,35-2,5 bar *(5-35 PSI)* adjustable
Elements	Flow characteristics see page 5
Media	Mineral oils, other fluids on request

Return Line Filter RTF 10/25 Dimensions

Dimensions

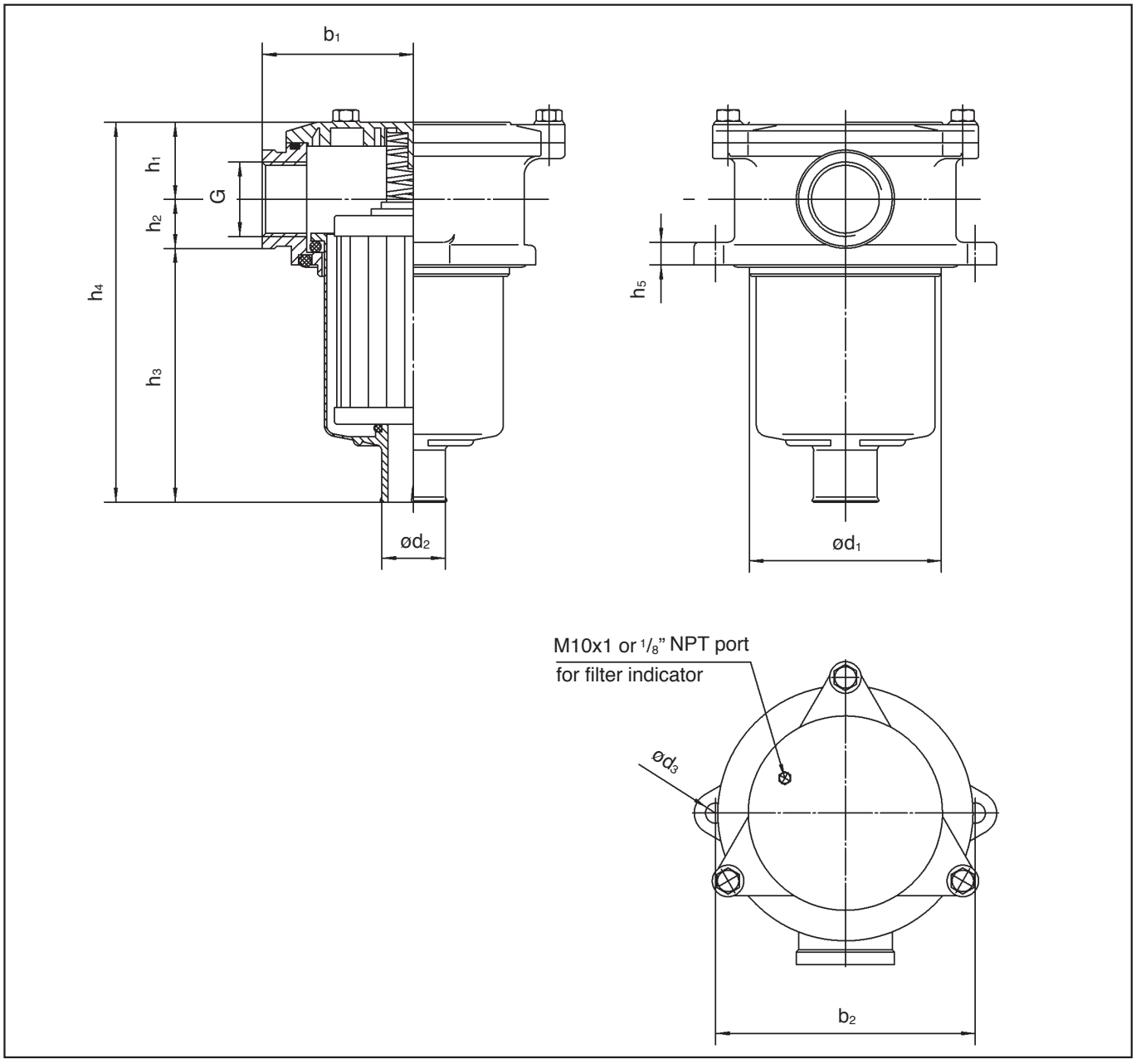

Dimensions RTF 10/25 Filters

All dimensions in mm *(inch)*

Filter Size	Thread connection G														Weight	
	BSP	NPT	SAE-"O" Ring	Bowl length	h_1	h_2	h_3	h_4	h_5	b_1	b_2	d_1	d_2	d_3	k_g	lbs
RTF 10	G 1/2	1/2	N/A	S1	26 *(1,02)*	21 *(0,83)*	87 *(3,43)*	133 *(5,24)*	8 *(0,32)*	50 *(1,97)*	90 *(3,54)*	66 *(2,60)*	24 *(0,94)*	7 *(0,28)*	0,45	1
RTF 25	G 1	1	1 5/16-12 UNF	S1	34 *(1,34)*	29 *(1,14)*	105 *(4,13)*	170 *(6,69)*	10 *(0,39)*	67 *(2,64)*	115 *(4,65)*	86 *(3,39)*	28 *(1,10)*	9 *(0,35)*	0,9	2
RTF 25	G 1	1	1 5/16-12 UNF	S2	34 *(1,34)*	29 *(1,14)*	150 *(5,91)*	215 *(8,46)*	10 *(0,39)*	67 *(2,64)*	115 *(4,65)*	86 *(3,39)*	28 *(1,10)*	9 *(0,35)*	1	2,2

Return Line Filters RTF 10/25 Ordering Code & Flow Characteristics

RTF 25 N ... B S2 V /X

Filter type	RTF

Group

Size	Flow*	
	l/min	GPM
10	38	10
25	90	25

* Note Exact flow will depend on filter element selected. Consult technical information below.

Connection style		Group	
Code	Connection style	10	25
B	BSP	G1/2	G1
N	NPT	1/2	1
S	SAE "O"-Ring thread	N/A	15/16 - 12UN

For complete filters:

identification filter material
+ micron rating code
(see ordering code filter elements below)

Design Code

only for information

Clogging Indicator

N	No Indicator
V	Visual
E	Electrical

See page 18 for more details on the indicator options.

Length

S1	Bowl length 1
S2	Bowl length 2

RTF 10 size available in bowl length 1 only

Seal material

B	NBR (Buna®)

RTE 25 D 10 B / S2 /X

Series	RTE

Group

according to filter housing

Filter material		Micron ratings available
Code	Material	
D	Filter paper	10, 20, 25,
G	Inorganic glass fiber	10,25

Design Code

only for information

Length

S1	for bowl length 1
S2	for bowl length 2

RTF 10 size available in bowl length 1 only

Seal material

B	NBR (Buna®)

Micron rating

Code	Rating
10	10 µm
20	20 µm
25	25 µm

Flow characteristics of return Line Filters RTF 10/25

The following characteristics ar valid for mineral oils with a density of 0,85 kg/dm³ and the kirnematic viscosity of 30 mm²/s. The characteristics have been determined in accordance to ISO 3968.

Filter Housing RTF 10/25 Series

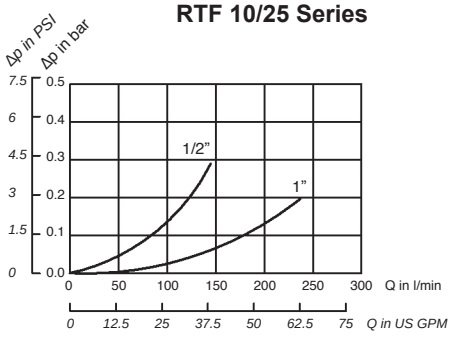

Filter Elements RTE 10

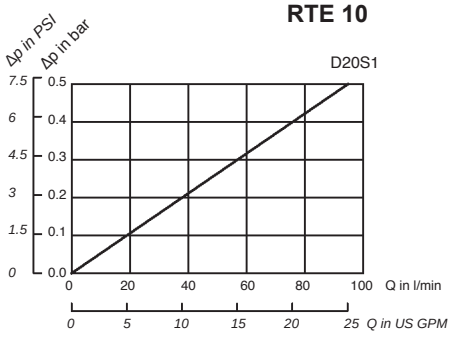

Filter Elements RTE 25

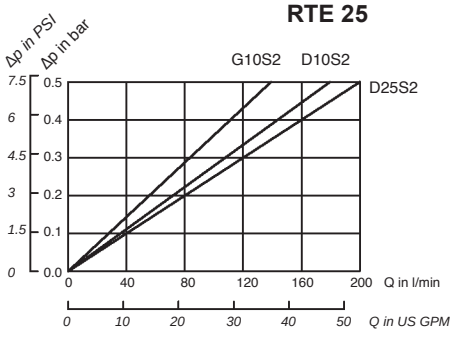

Return Line Filter RTF 40 Series Technical Data

Technical Data

STAUFF RTF 40 series return filters are designed for in-tank hydraulic applications with a maximum operating pressure of 6.9 bar *(100 PSI)*. The filter bowl is designed to return the oil beneath the surface thus preventing entrainment of air. The RTF48 elements interchange with the popular “K” series and the RTF49 elements interchange with the “RTE-409” series elements.

Technical Specification

Construction	Tank top flange mounting
Filter head	Die cast aluminum
Element bowl	Bowl length 1, Polyamide Bowl length 2, Steel
Seals	“O”-Rings NBR (Buna-N®),
Port connections	BSP, NPT, SAE-“O“-Ring thread, SAE flange
Flow rating	up to 379 l/min *(100 US GPM)* for 32 cSt *(150 SUS)* fluids
Operating Pressure	max 6,9 bar *(100 PSI)*
Temperature range	-25ºC to +95ºC *(-13°F to 212ºF)*

By-pass valve	Allows unfiltered oil to by-pass the contaminated element once the opening pressure has been reached
By-pass setting	1.7 bar *(25 PSI)* (by-pass in element for RTF47, by-pass in head for RTF48 and RTF49)
Clogging indicators	Gage indicator 0-6.9 bar *(0-100 PSI)* with coloured segments; electrical, 0,35-2,5 bar *(5-35 PSI)* adjustable
Elements	Flow characteristics see page 9
Media	Mineral oils, other fluids on request

Return Line Filter RTF 40 Series Dimensions

Dimensions

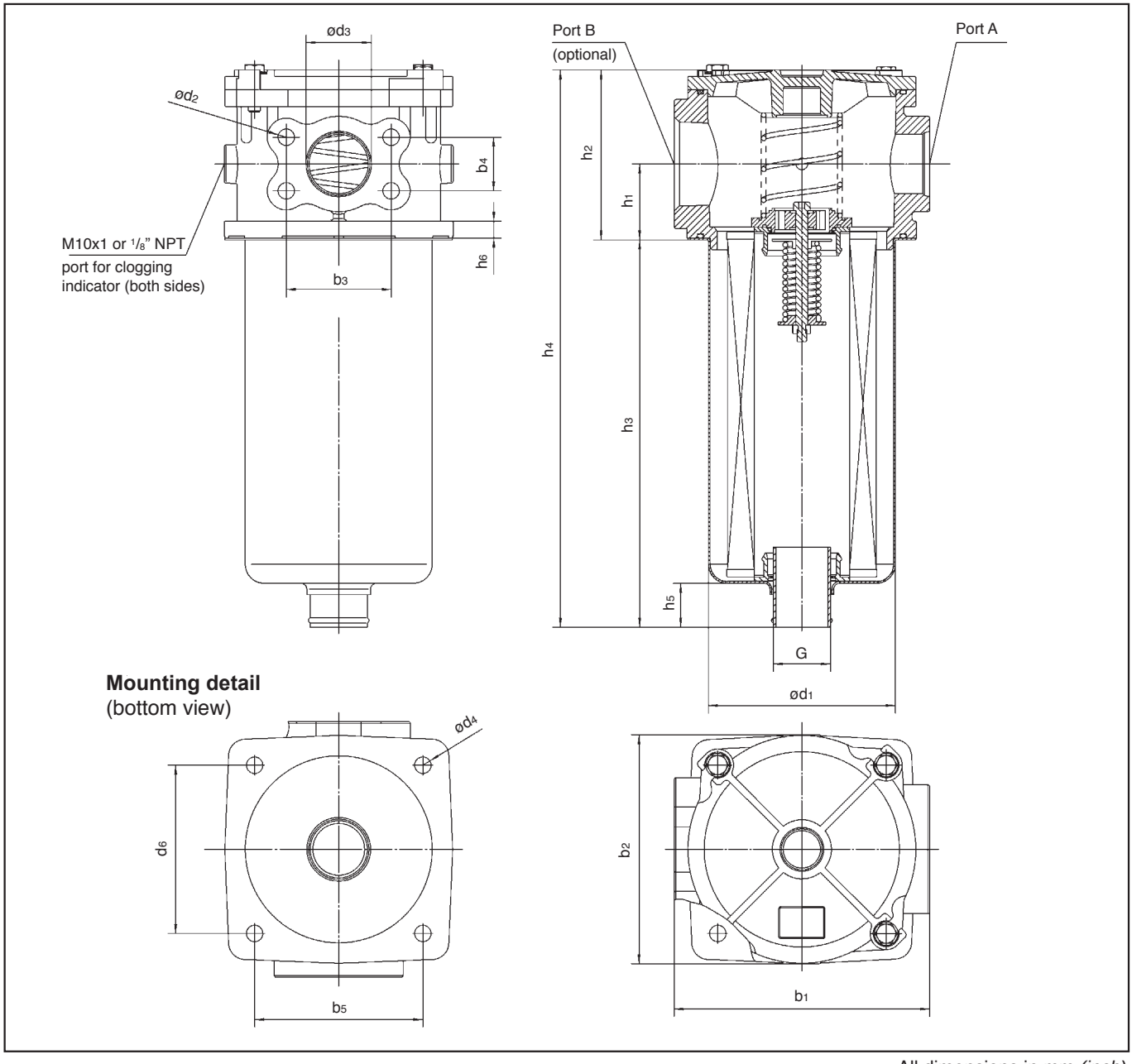

All dimensions in mm *(inch)*

Dimensions RTF 40 Filters

Bowl Length	h_1	h_2	h_3	h_4	h_5	h_6	b_1	b_2	b_3	b_4	b_5	b_6	d_1	d_2 BSP	d_2 NPT & SAE	d_3	d_4	G
S1	53 *(2,09)*	122 *(4,80)*	263 *(10,35)*	385 *(15,16)*	21 *(0,83)*	11 *(0,43)*	152 *(5,98)*	152 *(5,98)*	69,85 *(2,75)*	35,56 *(1,40)*	112 *(4,41)*	112 *(4,41)*	122 *(4,80)*	M12	1/2-13 UN 2B	38,1 *(1,50)*	11 *(0,43)*	G1-1/2" or 1-1/2 NPT
S2			475 *(18,70)*	597 *(23,50)*	38 *(1,50)*													

Return Line Filter RTF 40 Series Ordering Code

RTF 48 N 25 ... B / S2 / V /X

Filter type	RTF47 RTF48 RTF49

Connection style		Group	
Code	Connection style	Port A	Port B
B	BSP	G1-1/4 & 1-1/2 SAE flange	None
BB	BSP	G1-1/4 & 1-1/2 SAE flange	G1-1/4
N	NPT	1-1/4 NPT & 1-1/2 SAE flange	None
NN	NPT	1-1/4 NPT & 1-1/2 SAE flange	1-1/4 NPT
M	NPT	1-1/2 NPT	None
MN	NPT	1-1/2 NPT	1-1/2 NPT
MM	NPT	1-1/2 NPT	1-1/2NPT
S	SAE	1-5/8 -12 UN	None
SS	SAE	1-5/8 -12 UN	1-5/8 -12 UN
ST	SAE	1-5/8 -12 UN	1-7/8 -12 UN
SU	SAE	1-5/8 -12 UN	2-1/2 -12 UN
SO	Combination	1-5/8 -12 UN	2 NPT

Design Code

only for information

Clogging indicator

N	None
V	Visual
E	Electrical

See page 18 for more details on the indicator options.

Length

S1	for bowl length 1 (1 element)
S2	for bowl length 2 (2 elements)

Note: RTF 47 available in S1 bowl only

Seal material

B	NBR (Buna®)

other seal material on request

For complete filters:

identification filter material
+ micron rating code
(see ordering code filter elements below)

By-pass valve

Code	NBR (Buna®)
00	No by-pass
15	1 bar *(15 PSI)*
25	1,7 bar *(24,6 PSI)*

RTF 48 D 10 B /X

Group

according to filter housing

Filter material		Micron ratings available
Code	Material	
D	Filter paper	03, 10, 20, 25
G	Inorganic glass fiber	03,10, 25

Design Code

only for information

Seal material

B	NBR (Buna®)

other seal material on request

Micron rating

Code	Rating
03	03 µm
10	10 µm
20	20 µm
25	25 µm

Flow Characteristics of Return Line Filters RTF 40

The following characteristics are valid for mineral oils with a density of 0,85 kg/dm³ and the kinematic viscosity of 30 mm²/s. The characteristics have been determined in accordance to ISO 3968.

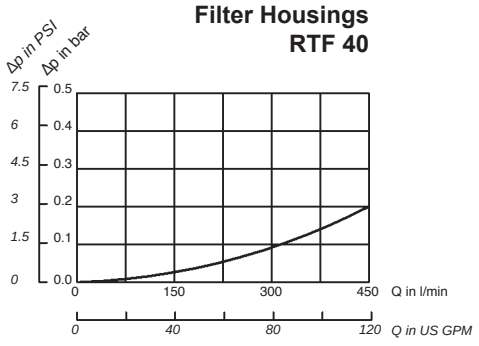

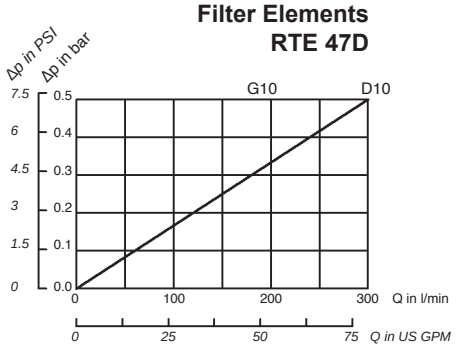

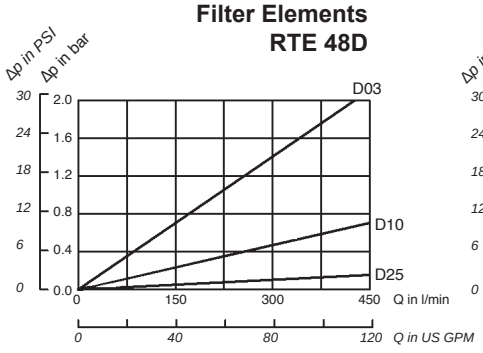

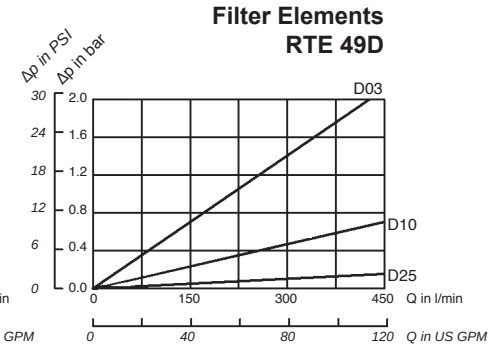

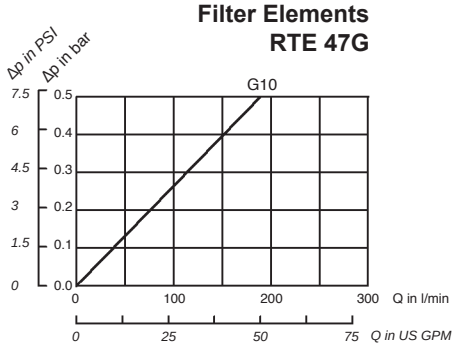

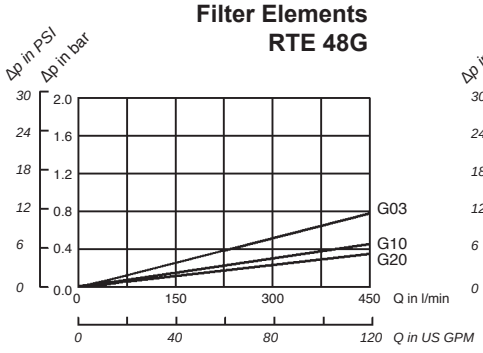

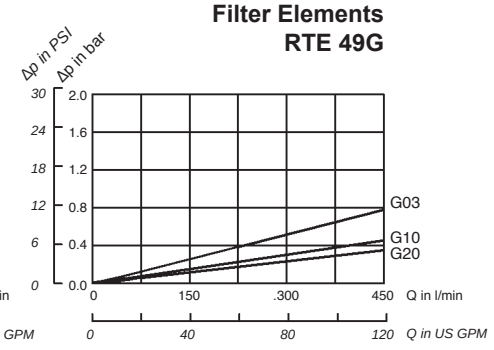

Technical Data

STAUFF RTF20 series return filters are designed for in-tank hydraulic applications with a maximum operating pressure of 10 bar *(145 PSI)* and flows up to 110 l/min *(30 US GPM)*. The filter bowl is designed to return the oil beneath the surface thus preventing entrainment of air. RTF20 series compact design and integral breather make them ideal for mobile hydraulic applications.

Technical Specification

Construction	Tank top flange mounting
Filter head	Die cast aluminium
Element bowl and screw cap	Polyamide
Seals	"O"-Rings NBR (Buna-N®) FPM (Viton®)
Port connections	BSP, NPT, SAE "O"-Ring thread
Flow rating	up to 115 l/min *(30 US GPM)* for 32 cSt *(150 SUS)* fluids
Operating pressure	max 10 bar *(145 PSI)*
Test pressure	min 24 bar *(350 PSI)*
Temperature range	-25°C to +100°C *(-13°F to 212°F)*

Integrated Breather	10 or 40 μm paper media
By-pass valve (integrated in the filter element)	Allows unfiltered oil to by-pass the contaminated element once the opening pressure has been reached Opening pressure 1.7 bar *(25 PSI)*
Clogging indicators	Gage indicator 0-6.9 bar *(0-100 PSI)* with coloured segments Electrical, 0.35 - 2.5 bar *(5-35 PSI)* adjustable
Filter elements	Flow characteristics see page 13
Media	Mineral oils, other fluids on request

Return Line Filter RTF20 Dimensions

Dimensions

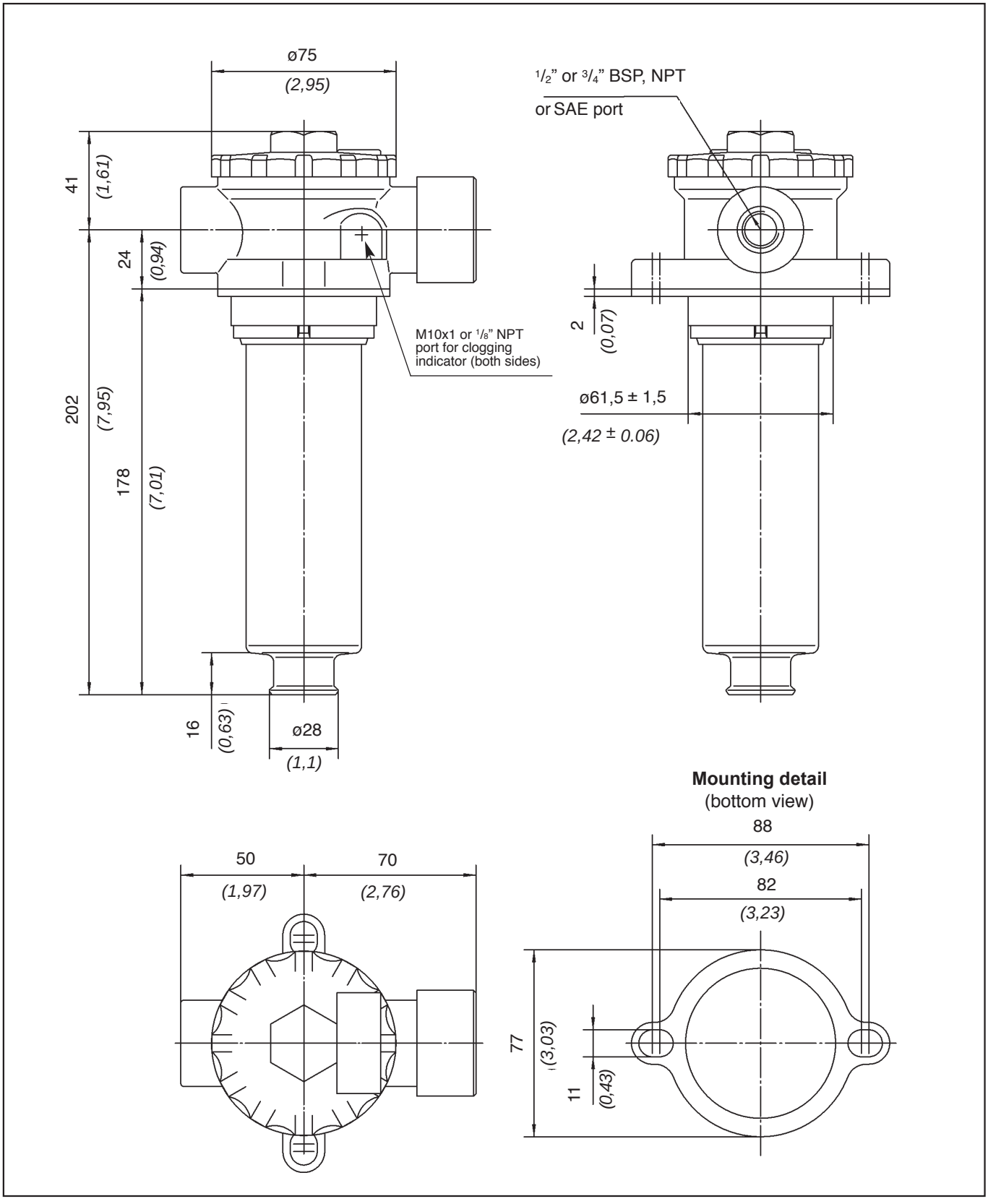

Dimensions in mm *(inch)*

Return Line Filter RTF20 Ordering Code

Ordering Code Filter Housings

RTF 20 N1 ... B V B10 D /X

Filter type	RTF20

Connection Style

Code	Connection Style	
B1	BSP	G 1/2
B2	BSP	G 3/4
N1	NPT	1/2
N2	NPT	3/4
S1	SAE- "O"- Ring Thread	3/4 -16 UN
S2	SAE- "O"- Ring Thread	1 1/16 -12 UN

For complete filters:
identification filter material
+ micron rating code
(see ordering code filter elements below)

Design Code
only for information

Dipstick

-	Without dipstick
D	Dipstick

Breather

B10	10 µm paper
B40	40 µm paper

Clogging indicator

N	without clogging indic.
V	visual
E	electrical

See page 18 for more details on the indicator options.

Seal material

B	NBR (Buna®)

Ordering Code Filter Elements

RTE20 D 10 B /X

Series	RTE20

Filter material

Code	Material	Micron ratings available
D	Filterpaper	10
G	Inorganic glass fiber	6,10,20

Design Code
only for information

Seal material

B	NBR (Buna®)

Micron rating

06	6 µm
10	10 µm
20	20 µm

Flow Characteristics

The following characteristics are valid for mineral based fluids with a density of 0,85 kg/dm³ and the kinematic viscosity of 30 mm²/s. The characteristics have been determined in accordance to ISO 3968.

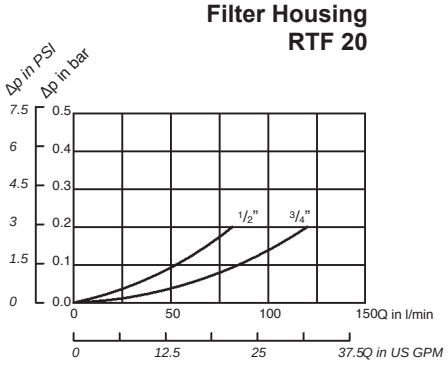

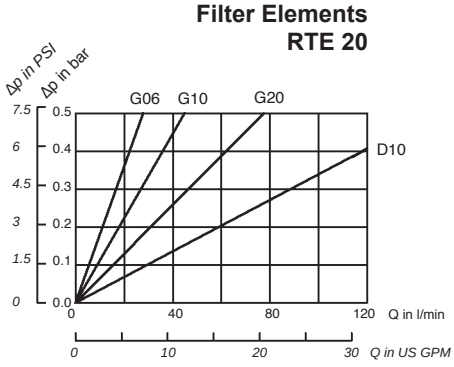

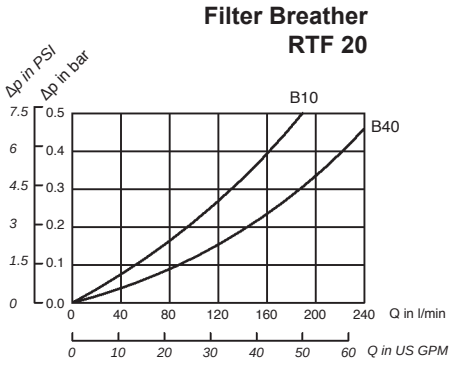

Return Line Filter RTF30 Technical Data

Technical Data

STAUFF RTF30 series return filters are designed for in-tank hydraulic applications with a maximum operating pressure of 10 bar *(145 PSI)* and flows up to 152 l/min *(40 US GPM)*. The filter bowl is designed to return the oil beneath the surface thus preventing entrainment of air. RTF30 series compact design and integral breather makes them ideal for mobile hydraulic applications.

Technical Specification

Construction	Tank top flange mounting
Filter head	Die cast aluminium
Element bowl and screw cap	Polyamide
Seals	"O"-Rings NBR (Buna-N®) FPM (Viton®)
Port connections	BSP, NPT, SAE "O"-Ring thread
Flow rating	up to 152 l/min *(40 US GPM)* for 32 cSt *(150 SUS)* fluids
Operating pressure	max 10 bar *(145 PSI)*
Test pressure	min 24 bar *(350 PSI)*
Temperature range	-25°C to +100°C *(-13°F to 212°F)*

Integrated Breather	10 or 40 μm paper media
By-pass valve (integrated in the filter element)	Allows unfiltered oil to by-pass the contaminated element once the opening pressure has been reached Opening pressure 1.7 bar *(25 PSI)*
Clogging indicators	Gage indicator 0-6.9 bar *(0-100 PSI)* with coloured segments; Electrical, 0.35 - 2.5 bar *(5-35 PSI)* adjustable
Filter elements	Flow characteristics see page 17
Media	Mineral oils, other fluids on request

Return Line Filter RTF30 Dimensions

Dimensions

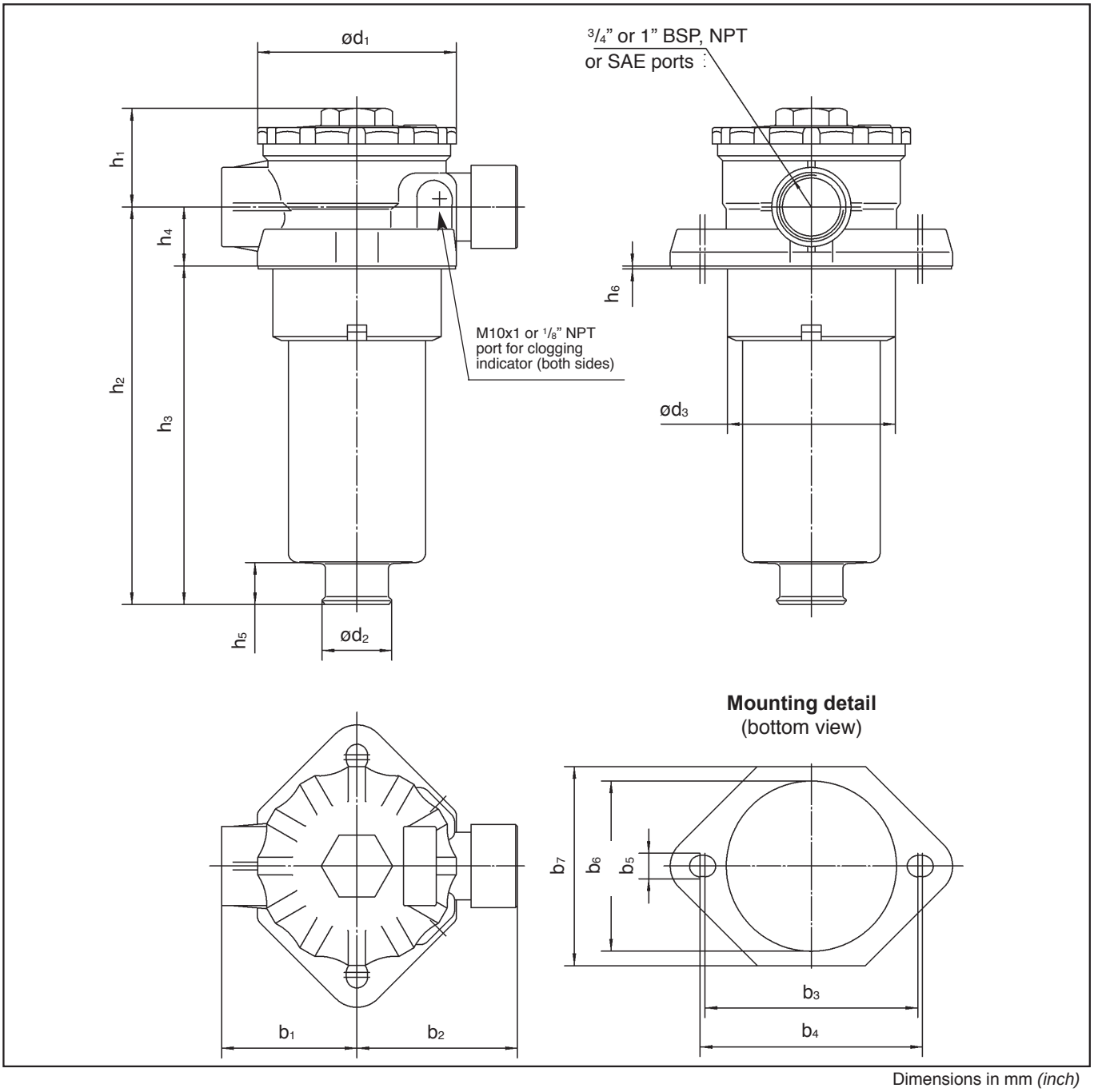

Dimensions in mm *(inch)*

Filter Size	Dimensions															
	h_1	h_2	h_3	h_4	h_5	h_6	d_1	d_2	d_3	b_1	b_2	b_3	b_4	b_5	b_6	b_7
RTF30	60 *(2,36)*	140 *(5,51)*	110 *(4,33)*	30 *(1,18)*	22 *(0,87)*	1,5 *(0,06)*	104 *(4,09)*	36 *(1,42)*	min 87 max 91 *(min 3,43)* *(max 3,58)*	70 *(2,76)*	83 *(3,27)*	110 *(4,33)*	115 *(4,53)*	11 *(0,43)*	min 87 max 91 *(min 3,43)* *(max 3,58)*	103 *(4,06)*
RTF31		205 *(8,07)*	175 *(6,89)*													
RTF32		305 *(12,01)*	275 *(10,83)*													

Return Line Filter RTF30 Ordering Code

Ordering Code Filter Housings

RTF 31 N1 ... B V B10 D /X

Filter Type	
RTF30	110mm *(4,33 in)* bowl length
RTF31	175mm *(6,89 in)* bowl length
RTF32	275mm *(10,83 in)* bowl length

Connection Style		
Code	Connection Style	
B1	BSP	3/4”
B2	BSP	1”
N1	NPT	3/4”
N2	NPT	1”
S1	SAE O-Ring Thread	1-1/16 -12 UN
S2	SAE O-Ring Thread	1-5/16 -12 UN

For complete filters:
identification filter material
+ micron rating code
(see ordering code filter elements below)

Design Code
only for information

Dipstick	
-	Without dipstick
D	Dipstick

Breather	
B10	10 µm paper
B40	40 µm paper

Clogging indicator	
N	without clogging indic.
V	visual
E	electrical

See page 18 for more details on the indicator options.

Seal material	
B	NBR (Buna®)

Ordering Code Filter Elements

RTE31 D 10 B /X

Series	RTE

Group
according to filter housing

Filter material		Micron ratings available
Code	Material	
D	Filterpaper	10
G	Inorganic glass fiber	6,10,20

Design Code
only for information

Seal material	
B	NBR (Buna®)

Micron rating	
06	6 µm
10	10 µm
20	20 µm

Flow Characteristics

The following characteristics are valid for mineral based fluids with a density of 0,85 kg/dm³ and the kinematic viscosity of 30 mm²/s. The characteristics have been determined in accordance to ISO 3968.

Filter Housings RTF 30/31/32

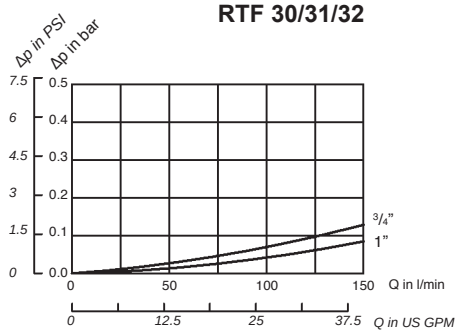

Filter Elements RTE 30

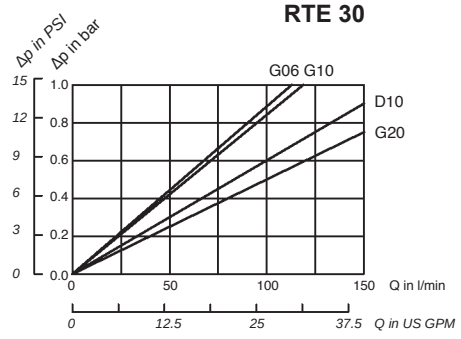

Filter Elements RTE 31

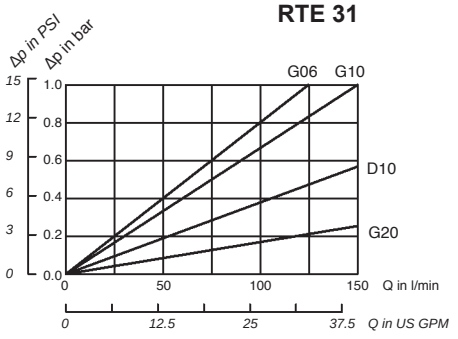

Filter Elements RTE 32

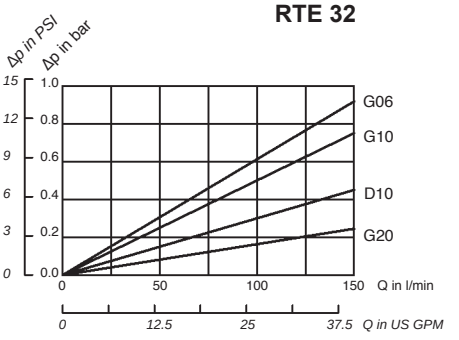

Filter Breather RTF 30/31/32

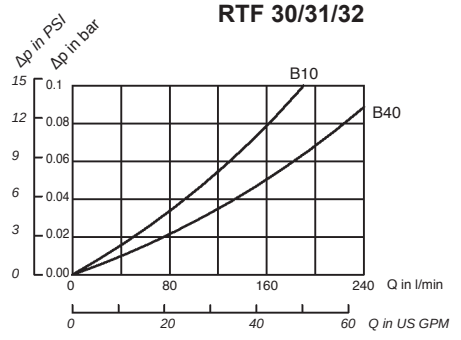

Visual Indicators

Type	Thread Type G
GV-5B / GV-10B / G-12B / CI-20B	G 1/8
GV-5 / GV-10 / G-12 / CI-20	1/8 NPTF

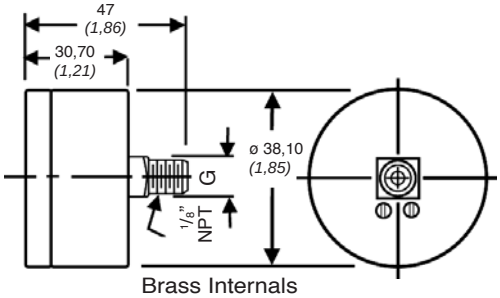

Brass Internals

Vacuum Gauges, Suction Line Applications

GV-5

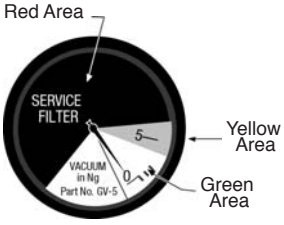

For use with 3PSI filter by-pass valve
0,2 bar *(3 PSI)*

GV-10

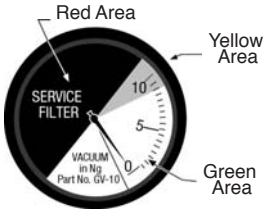

For use with 5PSI filter by-pass valve
0,35 bar *(5 PSI)*

Pressure Gauges, Return Line Applications

CI-12

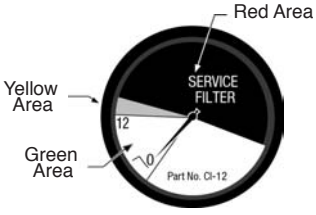

For use with 15PSI filter by-pass valve
1,0 bar *(15 PSI)*

CI-20

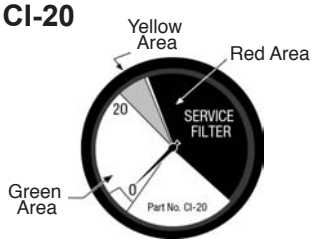

For use with 25PSI filter by-pass valve
1,7 bar *(25 PSI)*

Electrical Indicator

Type	Thread Type
EPS-1B / EVS 1B	G 1/8
EPS-1 / EVS 1	1/8 NPT

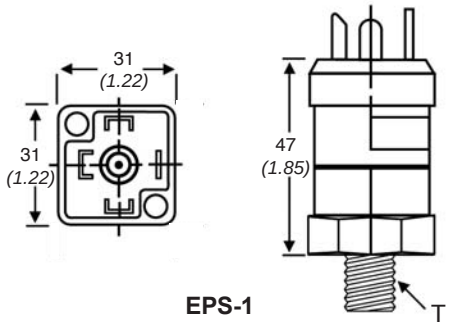

EPS-1

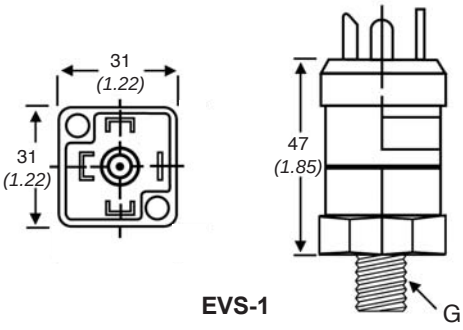

EVS-1

Can Be Field Installed

All dimensions in mm *(inch)*

	EPS-1 (Pressure)	EVS-1 (Vacuum)
Electrical	7Amp 125/250 VAC	7Amp 125/250 VAC
Protection	DIN 43650 IP65	DIN 43650 PIP65
Temperature Range	-40˚C to +80˚C *(-40˚F to 180˚F)* Ambient & Medium	-40˚C to +80˚C *(-40˚F to +180˚F)* Ambient & Medium
Diaphragm Material	Epichlorohydrin Standard	Epichlorohydrin Standard
Housing Material	Zinc Plated Steel Standard	Aluminum AL2024
MAXIMUM OVER Pressure	25 Bar *(350 PSI)* 6:1 Safety Factor	25 Bar *(350 PSI)*
ADJUSTMENT RANGES	0.35/2.5 Bar *(5/35 PSI)*	150/1000 mBar *(5/30 in Hg)*
Dead Band	20%	25%
Maximum Pressure	25 Bar *(350 PSI)*	25 Bar *(350 PSI)*
Welted Area Material	Elastomer & Zinc Plated Steel Brass	Elastomer & Anodized Aluminum 316SS Optional
Weight	Steel Housing 0.11 Kg *(0.23 lb)*	0.25 Kg *(0.50 lbs.)*
Repeatability	±2% at 20˚C *(70˚F)* Ambient Temperature	±2% at 20˚C *(70˚F)* Ambient Temperature
Hirschmann Connector With Strain Relief		

STAUFF®

FILTRATION TECHNOLOGY

2003

STAUFF

Return Line Filters RIF48

Quality and Service
Worldwide

Australia
Stauff Corporation (Pty.) Ltd.
P.O.Box 227 , 24-26 Doyle Avenue,
Unanderra Wollongong , N.S.W
2526 AUSTRALIA
Tel: +61 2 42 71 18 77
Fax: +61 2 42 71 84 32

Brazil
Stauff Brasil Ltda.
Av. Gupê 10767
Galpão 2 – Bloco A
Barueri – São Paulo – CEP 06422-120, BRAZIL
Tel: +55 (0)11-4789-9020
Fax: +55 (0)11-4789-9021

Canada
Stauff Canada Ltd.
866 Milner Avenue
Scarborough , Ontário M1B 5N7 , CANADA
Tel: +1 416 282 46 08
Fax: +1 416 282 30 39

China
Stauff International Trading (Shangai) Co., Ltd.
Shangdian Mansion, Pudong
331 , Binzhou Road
200126 Shangai, CHINA
Tel: +86 21 58 45 65 60
Fax: +86 21 58 45 66 80

France
Stauff S.A.
Z.I. de Vineuil-Blois Sud
230, Avenue du Grain d'Or
41354 Vineuil-cedex, FRANCE
Tel: +33 2 54 50 55 50
Fax: +33 2 54 42 29 19

India
Stauff India Pvt. Ltd.
Gat. No. 2340,
Pune-Nagar Road, Wagholi, INDIA
IND-Pune - 412027
Tel: +91 20 705 19 90
Fax: +91 20 705 19 89

Italy
Stauff Italia S.R.L.
Via Pola 21/23, I-20034
Birone di Giussano, ITALY
Tel: +39 0362 31 21 13
Fax: +39 0362 33 55 36

New Zealand
Stauff Corporation (NZ) Ltd.
Unit J. 150 Harris Road, P.O. Box 58517
Greenmount Auckland-NEW ZEALAND
Tel: +64 9 271 4812
Fax: +64 9 271 4832

United Kingdom
Stauff UK Ltd.
332, Coleford Road Darnall
Sheffield, S 9 5 P H, ENGLAND
Tel: +44 1142 518 518
Fax: +44 1142 518 519

USA
Stauff Corporation
7 Wm. Demarest Place
Waldwick, NJ – 07463, USA
Tel: +1 201 444 78 00
Fax: +1 201 444 78 52

Distributors and warehouses in all industrial countries.

Walter Stauffenberg GmbH & Co. KG

P. O. Box 1745 · D-58777 Werdohl
Im Ehrenfeld 4 · D-58791 Werdohl
Tel.: +49 (0) 2392 916-0
Fax: +49 (0) 2392 2505
E-mail: sales@stauff.com
Internet: http://www.stauff.com

Stauff Filtration Technology

Stauff Filtration Technology offers a complete range of filtration products and services that will provide the system designer or user with the highest level of contamination control demanded by today's most sophisticated applications. Products include pressure filters, return line filters, elements, spin on filters suction strainers, and filler breathers for various hydraulic, lubrication and fuel oils.

Stauff has the technical expertise to provide superior filter element designs for the Stauff original filter housings and also for the interchange element market. Stauff manufactures more than 10,000 different elements. Many of these are designed to fit into filter housings produced by other companies while maintaining or surpassing the original performance.

The "Stauff Contamination Control Program" includes the diagnostic services including fluid sampling and laser particle counting products needed to monitor the system contamination level.

Stauff, through its global network of wholly owned companies and technically qualified distributors, is ideally placed to assist its customers in the total contamination process providing a well balanced filtration solution.

Return Line Filter RIF48 — Page

Technical Data

STAUFF RIF48 series return filters are designed for in-line hydraulic applications with a maximum operating pressure of 20 bar *(300 PSI)*. **The RIF48 series pressure filter meets the HF4 Automotive Standard.**

Technical Specification

Construction	In-line assembly
Filter head	Die cast aluminium
Element case	Steel
Seals	O-Rings NBR (Buna-N®) FPM (Viton®)
Port connections	BSP, NPT, SAE “O”-Ring thread or SAE Code 61 flange
Flow rating for	up to 380 l/min *(100 US GPM)* 32 cSt *(150 SUS)* fluids
Operating pressure	max 20 bar *(300 PSI)*
Burst pressure	min 70 bar *(1000 PSI)*
Temperature range	-29°C to +107°C *(-20°F to +225°F)*
By-pass valve	Allows unfiltered oil to by-pass the contaminated element once the opening pressure has been reached
By-pass setting	2.8 bar *(40 PSI)*
Clogging indicators	standard actuating pressure 2.8 bar *(40 PSI)* indicators types: visual and electrical (AC and DC voltage versions)
Filter elements	Flow characteristics see page 7
Media	Mineral oils, other fluids on request

Dimensions

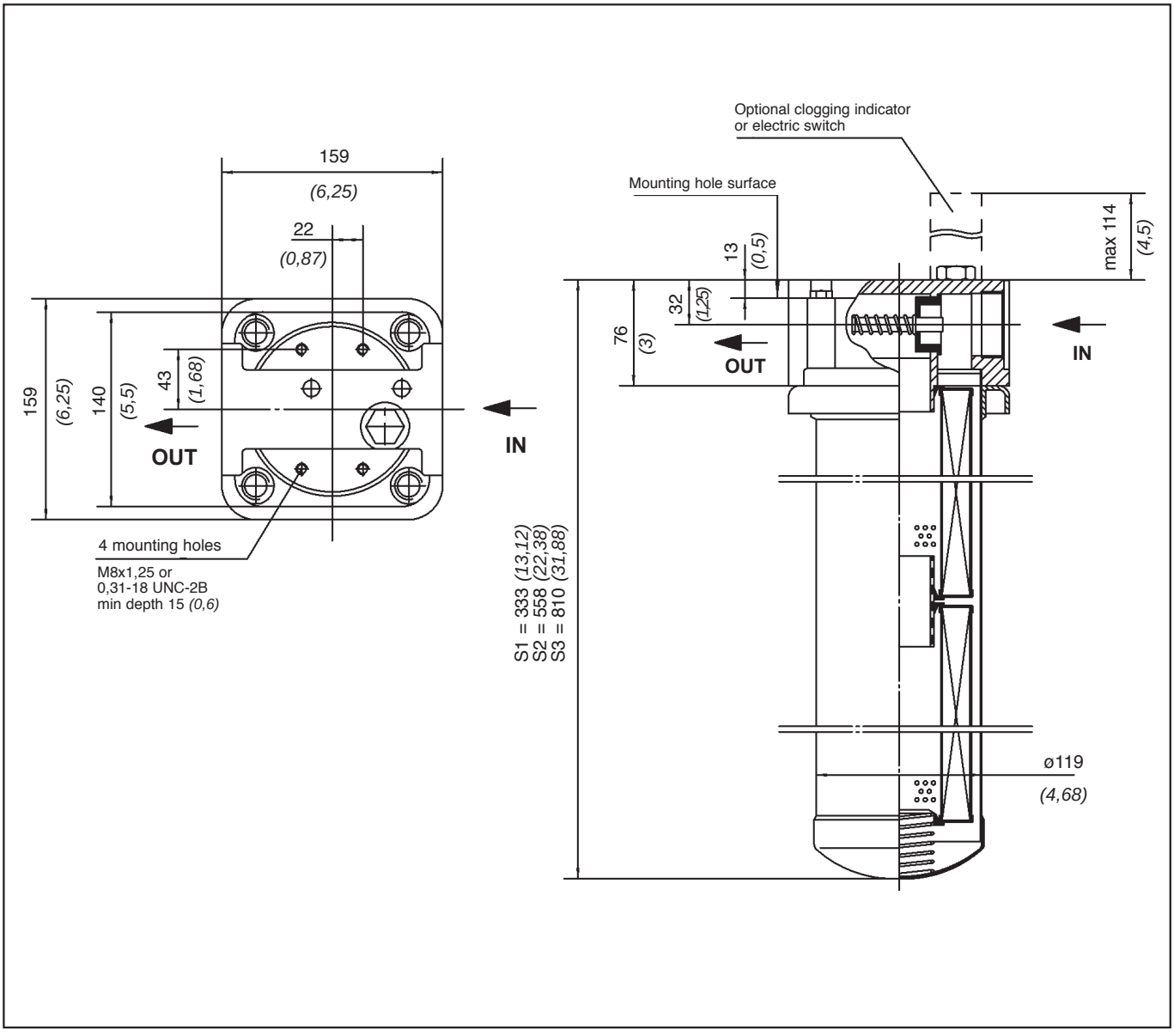

All dimensions in mm *(inch)*

Return Line Filter RIF48 Clogging Indicators

1. Visual clogging indicator

Part number HI48-V is a mechanical magnetic cartridge with a highly visible orange disk that pops up at 2.8 bar *(40 PSI)*. Once activated the orange signal continues to indicate a by-pass condition until it is manually reset.

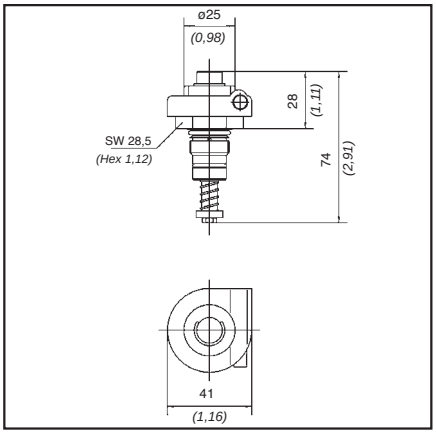

2. Electrical clogging indicator

Part number HI48-EAC and HI48-EDC are used when a electrical signal is needed to indicate when the element needs changing. The solid state switch is activated at 2.8 bar *(40 PSI)*. The indicators are supplied with a 200 mm *(8 in)* long wire leads and are NEMA 4 rated.

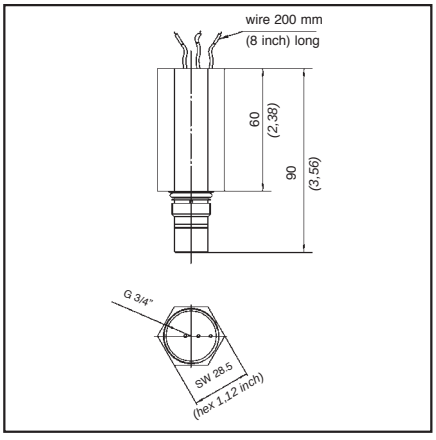

2.1 HI48-EAC Ratings

Voltage	max 240 VAC
Wattage	max 720 Watts
Current	0.10 to 6 amps
Contact type	solid state

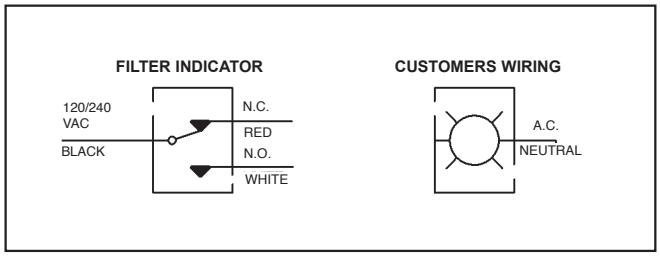

2.2 HI48-VDC Ratings

Voltage	max 100 VDC
Wattage	max 50 Watts
Current	0.01 to 2 amps
Contact type	solid state

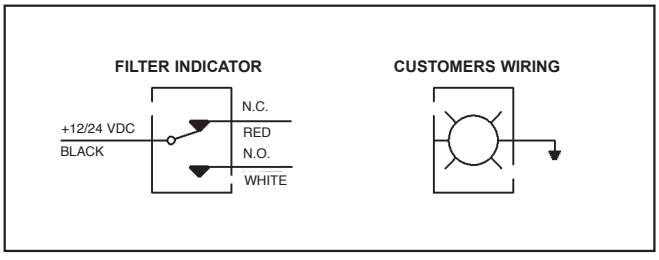

Ordering Code

HI 48 E AC /X

Clogging Indicator

Series	RIF48

Code	Execution
V	visual
E	electrical

Design Code
only for information

Voltage (only for Code E)	
AC	max 240 VAC
DC	max 100 VDC

Return Line Filter RIF48 Ordering Code

Ordering Code Filter Housings

RIF48 S ... B S1 V /X

Filter type	RIF48

Port Size	
Code	Connection Type
B	G 1 1/2
S	1 7/8 - 12 SAE (Standard)
N	1 1/2 NPT
F	1 1/2 SAE Code 61 Flange

for complete filters:
identification filter material
+ micron rating code
(see ordering code filter elements below)

Design Code
only for information

Clogging indicator	
N	without clogging indic.
V	visual
E	electrical

Bowl Length	
S1	Single Element
S2	Double Element
S3	Triple Element

Seal material	
B	NBR (Buna®)
V	FPM (Viton®)

Ordering Code Filter Elements

RTE48 G 10 B /X

Series	RTE48

Filter material			Micron ratings available
Code	Material	max $\Delta p^*_{collapse}$	
D	Filterpaper	10 bar *(150 PSI)*	03,10,25
G	Inorganic glass fiber	10 bar *(150 PSI)*	03,10,25
	*collapse / burst resistance as per ISO 2941		

Design Code
only for information

Seal material	
B	NBR (Buna®)
V	FPM (Viton®)

Micron rating	
03	3 µm
10	10 µm
25	25 µm

Flow Characteristics

The following characteristics are valid for mineral based fluids with a density of 0,85 kg/dm³ and the kinematic viscosity of 30 mm²/s. The characteristics have been determined in accordance to ISO 3968.

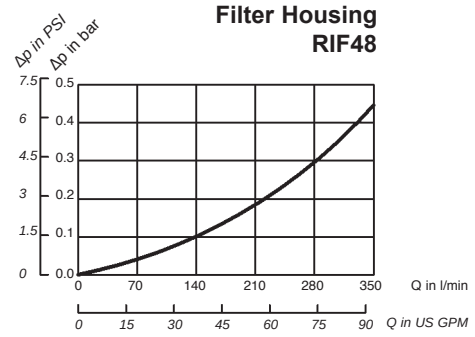

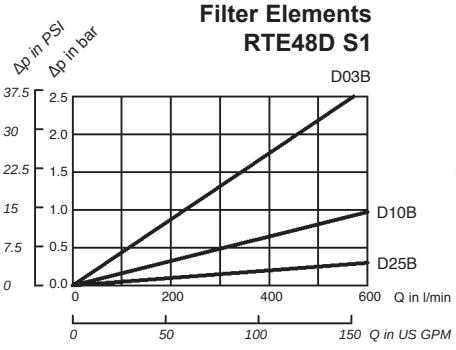

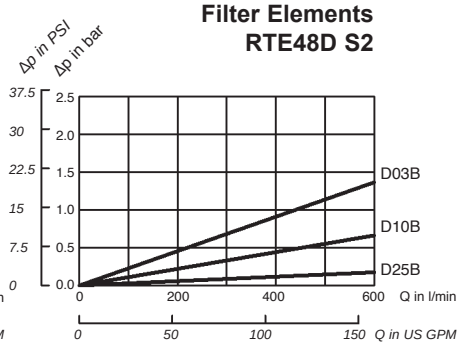

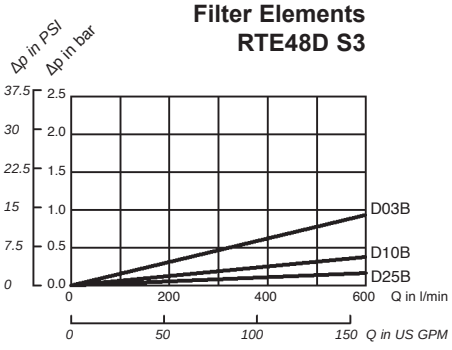

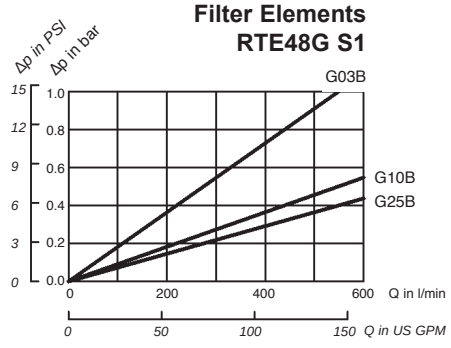

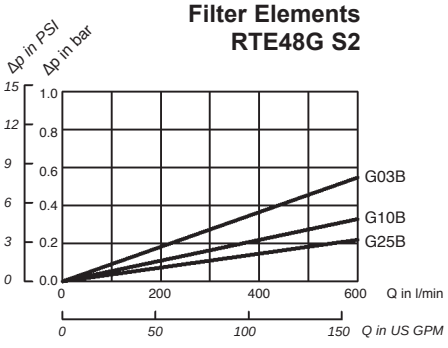

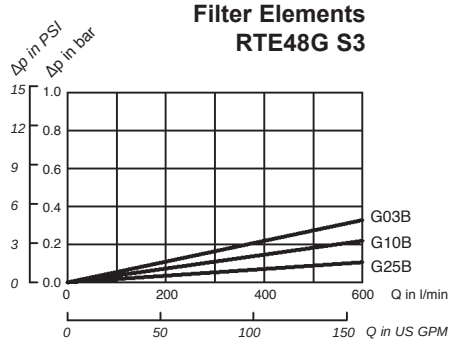

Spin-On Filters

Stauff manufactures a very complete range of high and low pressure spin-on filters. A wide variety of filter heads, element and indicator options are available. Both North American as well as European spin-on elements are available from stock.

STAUFF®

STAUFF®

FILTRATION TECHNOLOGY

2003

STAUFF

Spin On Filters

Quality and Service Worldwide

Australia
Stauff Corporation (Pty.) Ltd.
P.O.Box 227 , 24-26 Doyle Avenue,
Unanderra Wollongong , N.S.W
2526 AUSTRALIA
Tel: +61 2 42 71 18 77
Fax: +61 2 42 71 84 32

Brazil
Stauff Brasil Ltda.
Av. Gupê 10767
Galpão 2 – Bloco A
Barueri – São Paulo – CEP 06422-120, BRAZIL
Tel: +55 (0)11-4789-9020
Fax: +55 (0)11-4789-9021

Canada
Stauff Canada Ltd.
866 Milner Avenue
Scarborough , Ontário M1B 5N7 , CANADA
Tel: +1 416 282 46 08
Fax: +1 416 282 30 39

China
Stauff International Trading (Shangai) Co., Ltd.
Shangdian Mansion, Pudong
331 , Binzhou Road
200126 Shangai, CHINA
Tel: +86 21 58 45 65 60
Fax: +86 21 58 45 66 80

France
Stauff S.A.
Z.I. de Vineuil-Blois Sud
230, Avenue du Grain d'Or
41354 Vineuil-cedex, FRANCE
Tel: +33 2 54 50 55 50
Fax: +33 2 54 42 29 19

India
Stauff India Pvt. Ltd.
Gat. No. 2340,
Pune-Nagar Road, Wagholi, INDIA
IND-Pune - 412027
Tel: +91 20 705 19 90
Fax: +91 20 705 19 89

Italy
Stauff Italia S.R.L.
Via Pola 21/23, I-20034
Birone di Giussano, ITALY
Tel: +39 0362 31 21 13
Fax: +39 0362 33 55 36

New Zealand
Stauff Corporation (NZ) Ltd.
Unit J. 150 Harris Road, P.O. Box 58517
Greenmount Auckland-NEW ZEALAND
Tel: +64 9 271 4812
Fax: +64 9 271 4832

United Kingdom
Stauff UK Ltd.
332, Coleford Road Darnall
Sheffield, S 9 5 P H, ENGLAND
Tel: +44 1142 518 518
Fax: +44 1142 518 519

USA
Stauff Corporation
7 Wm. Demarest Place
Waldwick, NJ – 07463, USA
Tel: +1 201 444 78 00
Fax: +1 201 444 78 52

Distributors and warehouses in all industrial countries.

Walter Stauffenberg GmbH & Co. KG

P. O. Box 1745 · D-58777 Werdohl · Germany
Im Ehrenfeld 4 · D-58791 Werdohl · Germany
Tel.: +49 (0) 2392 916-0
Fax: +49 (0) 2392 2505
E-mail: sales@stauff.com
Internet: http://www.stauff.com

Stauff Filtration Technology

Stauff Filtration Technology offers a complete range of filtration products and services that will provide the system designer or user with the highest level of contamination control demanded by today's most sophisticated applications. Products include pressure filters, return line filters, elements, spin on filters suction strainers, and filler breathers for various hydraulic, lubrication and fuel oils.

Stauff has the technical expertise to provide superior filter element designs for the Stauff original filter housings and also for the interchange element market. Stauff manufactures more than 10,000 different elements. Many of these are designed to fit into filter housings produced by other companies while maintaining or surpassing the original performance.

The "Stauff Contamination Control Program" includes the diagnostic services including fluid sampling and laser particle counting products needed to monitor the system contamination level.

Stauff, through its global network of wholly owned companies and technically qualified distributors, is ideally placed to assist its customers in the total contamination process providing a well balanced filtration solution.

Spin-On Filters — Page

Spin-On Filters SLF 02, 03, 04

Technical Specification

Construction	Die cast aluminium head
Seals	NBR (Buna-N®)
Port connections	BSP, NPT, or SAE “O”-Ring thread
Flow rate	26 l/min *(7 US GPM)* for return line, 7 l/min *(2 US GPM)* for suction line applications
Working pressure	14 bar *(200 PSI)* working pressure, maximum pressure differential of 5,5 bar *(80 PSI)* for any application with no by-pass valve
Operating temperature	-32°C to +100°C *(-25°F to 212°F)*
By-pass valve	Built into the element
Clogging indicators	Gauge indicator with colored segments Electrical 0.35...2.5 bar *(5...35 PSI)* adjustable see page 22
Elements	For use with SF6300 series elements For element types and flow characteristics see page 12
Media	Mineral oils, other fluids on request

Dimensions

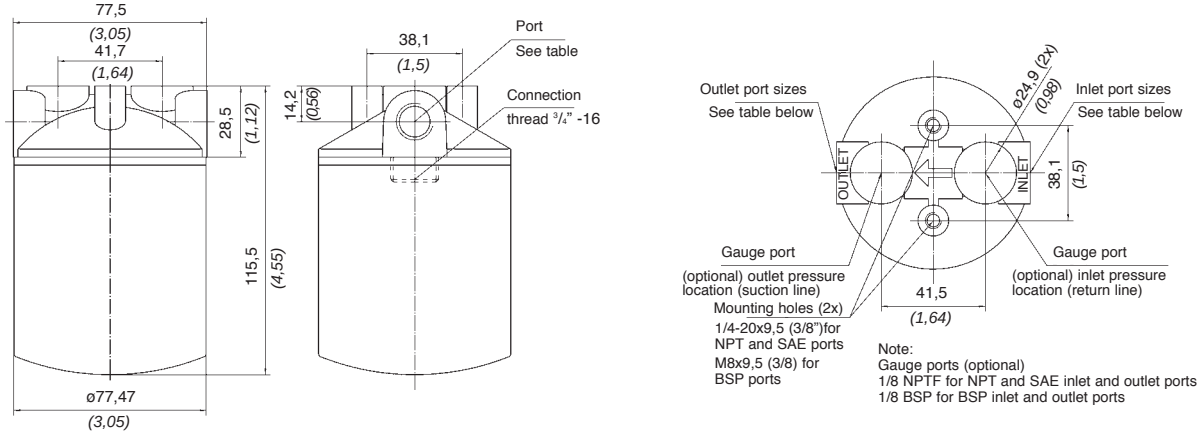

Dimensions in mm *(inch)*

Ordering Code

SLF 02 0

Filter type	SLF

Port options		
Code	**Connection Style**	
02B	BSP	G1/4
02	NPT	1/4 NPT
03B	BSP	G3/8
03	NPT	3/8 NPT
04	SAE	9/16 -18 UN

Indicator port options	
Code	**Description**
0	No indicator port
1	Gauge port drilled-return
2	Gauge port drilled-suction
4	All gauge ports drilled
9	Special

Note: Standard gauge port for BSP connection port is G 1/8. Standard gauge port for NPT and SAE connection port is 1/8 NPTF

Spin-On Filters SAF 05, 06, 07,11

Technical Specification

Construction	Die cast aluminium head
Seals	NBR (Buna-N®)
Port connections	BSP, NPT, or SAE “O”-Ring thread
Flow rate	90 l/min *(25 US GPM)* for return line, 23 l/min *(6 US GPM)* for suction line applications
Working pressure	14 bar *(200 PSI)* working pressure, maximum pressure differential of 5,5 bar *(80 PSI)* for any application with no by-pass valve
Operating temperature	-32°C to +100°C *(-25°F to 212°F)*
By-pass valve	Built into the head
Clogging indicators	Gauge indicator with colored segments Electrical 0.35...2.5 bar *(5...35 PSI)* adjustable see page 22
Elements	For use with SF6500 series elements For element types and flow characteristics see pages 13...14
Media	Mineral oils, other fluids on request

Dimensions

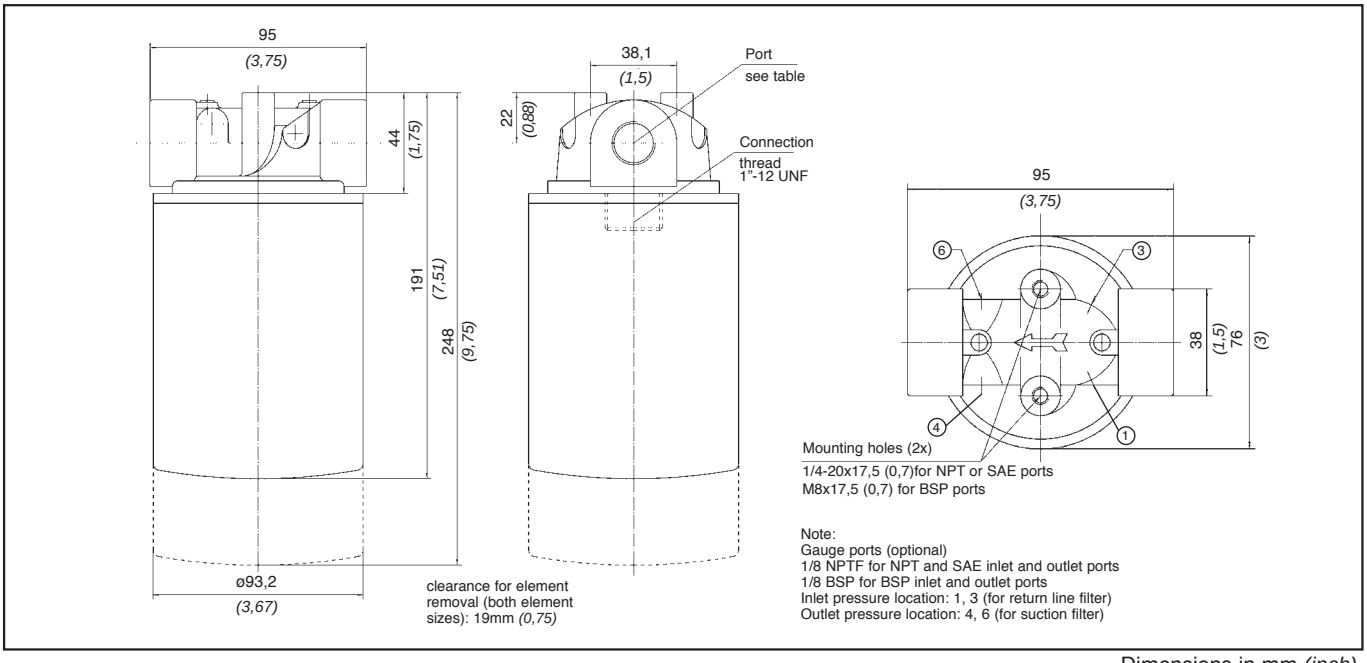

Dimensions in mm *(inch)*

Ordering Code

SAF 07 25 0

Filter type	SAF

Port options		
Code	**Connection Style**	
05B	BSP	G1/2
05	NPT	1/2 NPT
06	SAE	3/4-16 UN
07B	BSP	G3/4
07	NPT	3/4 NPT
11	SAE	1 1/16-12 UN

By-pass options	
Code	**Description**
00	No by-pass
03	0,2 bar *(3 PSI)*
05	0,33 bar *(5 PSI)*
15	1 bar *(15 PSI)*
25	1,7 bar *(25 PSI)*

Indicator port options	
Code	**Description**
0	No indicator port
1	Gauge pot drilled-return
2	Gauge port drilled-suction
4	All gauge ports drilled
9	Special

Note: Standard gauge port for BSP connection port is G1/8. Standard gauge port for NPT and SAE connection port is 1/8 NPTF

Spin-On Filters SAF 10,13

Technical Specification

Construction	Die cast aluminium head
Seals	NBR (Buna-N®)
Port connections	BSP, NPT, or SAE “O”-Ring thread
Flow rate	128 l/min *(34 US GPM)* for return line, 30 l/min *(8 US GPM)* for suction line applications
Working pressure	14 bar *(200 PSI)* working pressure, maximum pressure differential of 5,5 bar *(80 PSI)* for any application with no by-pass valve
Operating temperature	-32°C to +100°C *(-25°F to 212°F)*
By-pass valve	Built into the head
Clogging indicators	Gauge indicator with colored segments Electrical 0.35...2.5 bar *(5...35 PSI)* adjustable see page 22
Elements	For use with SF6500 series elements For element types and flow characteristics see pages 13...14
Media	Mineral oils, other fluids on request

Dimensions

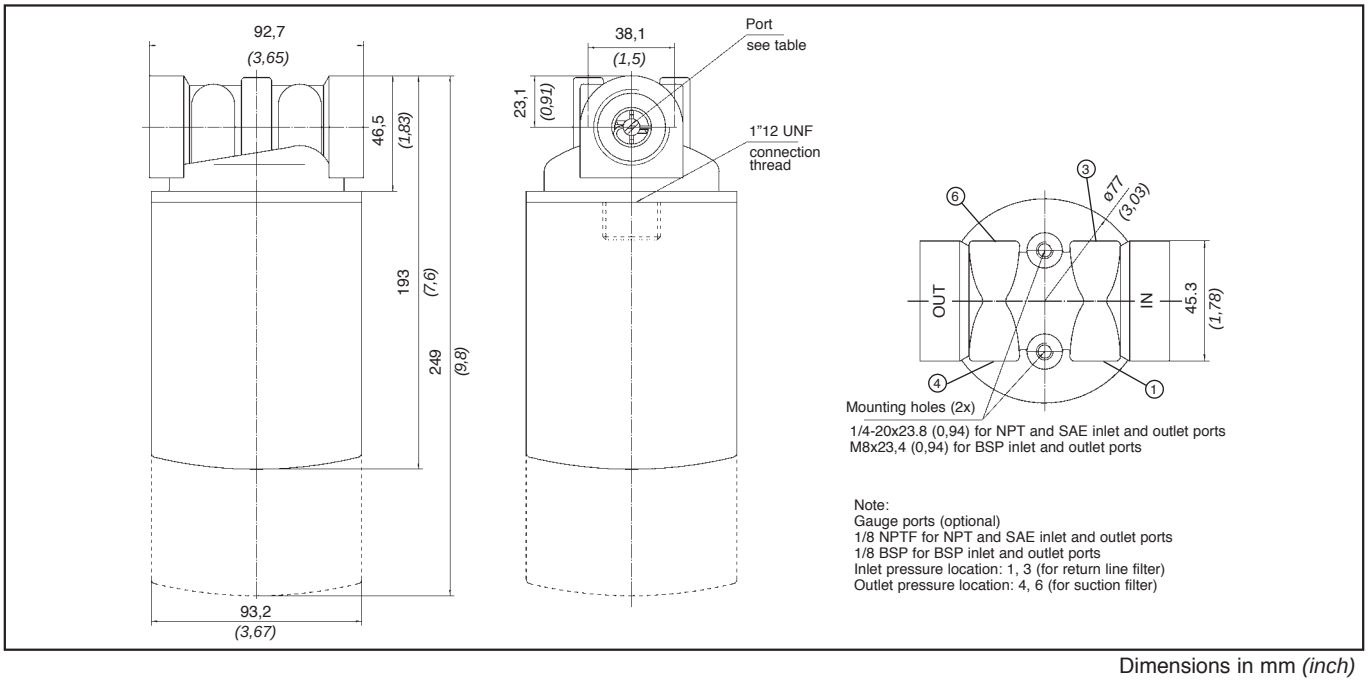

Dimensions in mm *(inch)*

Ordering Code

SAF 10 25 0

Filter type	SAF

Port options		
Code	**Connection Style**	
10B	BSP	G1
10	NPT	1 NPT
13	SAE	$1^{5}/_{16}$-12 UN

By-pass options	
Code	**Description**
00	No by-pass
03	0,2 bar *(3 PSI)*
05	0,33 bar *(5 PSI)*
15	1 bar *(15 PSI)*
25	1,7 bar *(25 PSI)*

Indicator port options	
Code	**Description**
0	No indicator port
1	Gauge port drilled-return
2	Gauge port drilled-suction
4	All gauge ports drilled
9	Special

Note: Standard gauge port for BSP connection port is G1/8. Standard gauge port for NPT and SAE connection port is 1/8 NPTF

Spin-On Filters SSF 12

Technical Specification

Construction	Die cast aluminium head
Seals	NBR (Buna-N®) seals
Port connections	BSP, NPT, or SAE “O”-Ring threaded
Flow rate	90 l/min *(25 US GPM)* for return line, 23 l/min *(6 US GPM)* for suction line applications
Working pressure	12 bar *(174 PSI)* working pressure, maximum pressure differential of 5,5 bar *(80 PSI)* for any application with no by-pass valve
Operating temperature	-32°C to +100°C *(-25°F to 212°F)*
By-pass valve	Built into the head
Clogging indicators	Gauge indicator with colored segments Electrical 0.35...2.5 bar *(5...35 PSI)* adjustable see page 22
Elements	For use with SFC35/36 series elements For element types and flow characteristics see pages 19...21
Media	Mineral oils, other fluids on request

Dimensions

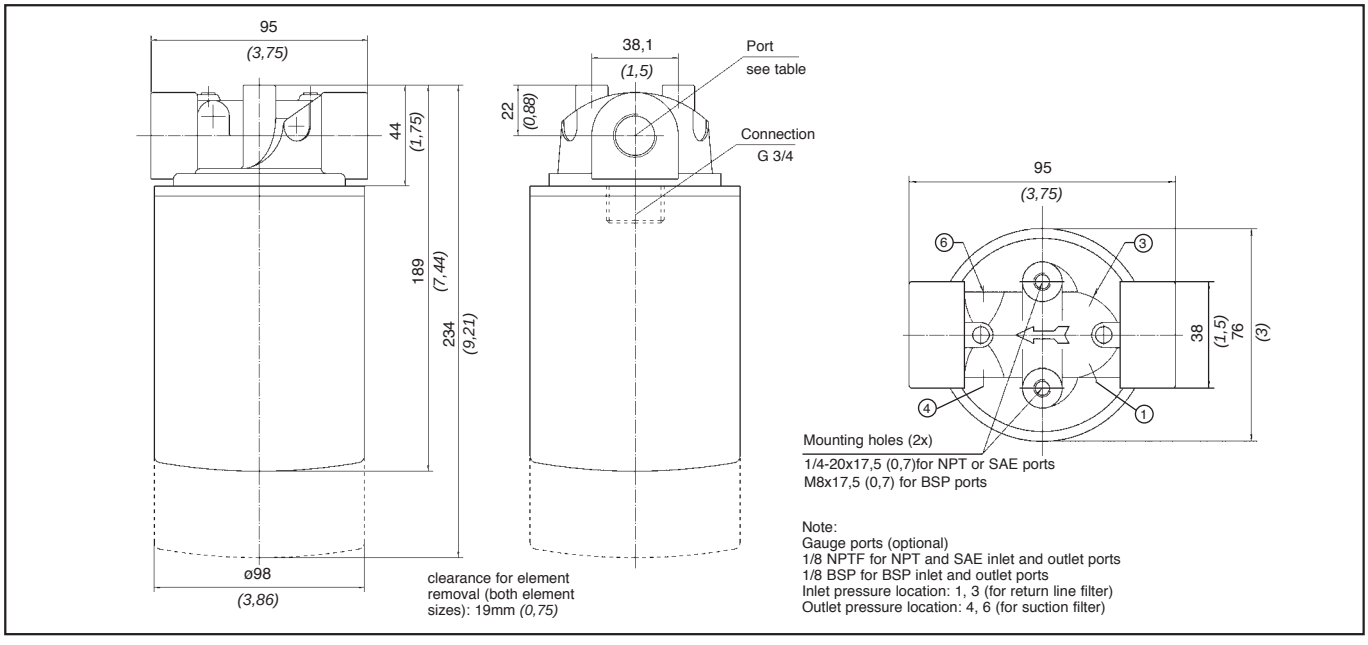

Dimensions in mm *(inch)*

Ordering Code

SSF 12 25 0

Filter type	SSF

Port options		
Code	**Connection Style**	
12	BSP	G3/4
12N	NPT	3/4 NPT

By-pass options	
Code	**Description**
00	No by-pass
03	0,2 bar *(3 PSI)*
05	0,33 bar *(5 PSI)*
15	1 bar *(15 PSI)*
25	1,7 bar *(25 PSI)*

Indicator port options	
Code	**Description**
0	No indicator port
1	Gauge port drilled-return
2	Gauge port drilled-suction
4	All gauge ports drilled
9	Special

Note: Standard gauge port for BSP connection port is G1/8. Standard gauge port for NPT and SAE connection port is 1/8 NPTF

Spin-On Filters SSF 20, 100, 120, 130, 160

Technical Specification

Construction	Die cast aluminium head
Seals	NBR (Buna-N®)
Port connections	BSP, NPT, or SAE “O”-Ring thread
Flow rate	225 l/min *(60 US GPM)* for return line, 46 l/min *(12 US GPM)* for suction line applications
Working pressure	14 bar *(200 PSI)* working pressure, maximum pressure differential of 5,5 bar *(80 PSI)* for any application with no by-pass valve
Operating temperature	-32°C to +100°C *(-25°F to 212°F)*
By-pass valve	Built into the head
Clogging indicators	Gauge indicator with colored segments Electrical 0.35...2.5 bar *(5...35 PSI)* adjustable see page 22
Elements	For use with SF6700 and SFC57/58 series elements For element types and flow characteristics see pages 15...18 for SF6700 see pages 20...21 for SFC57/58
Media	Mineral oils, other fluids on request

Dimensions

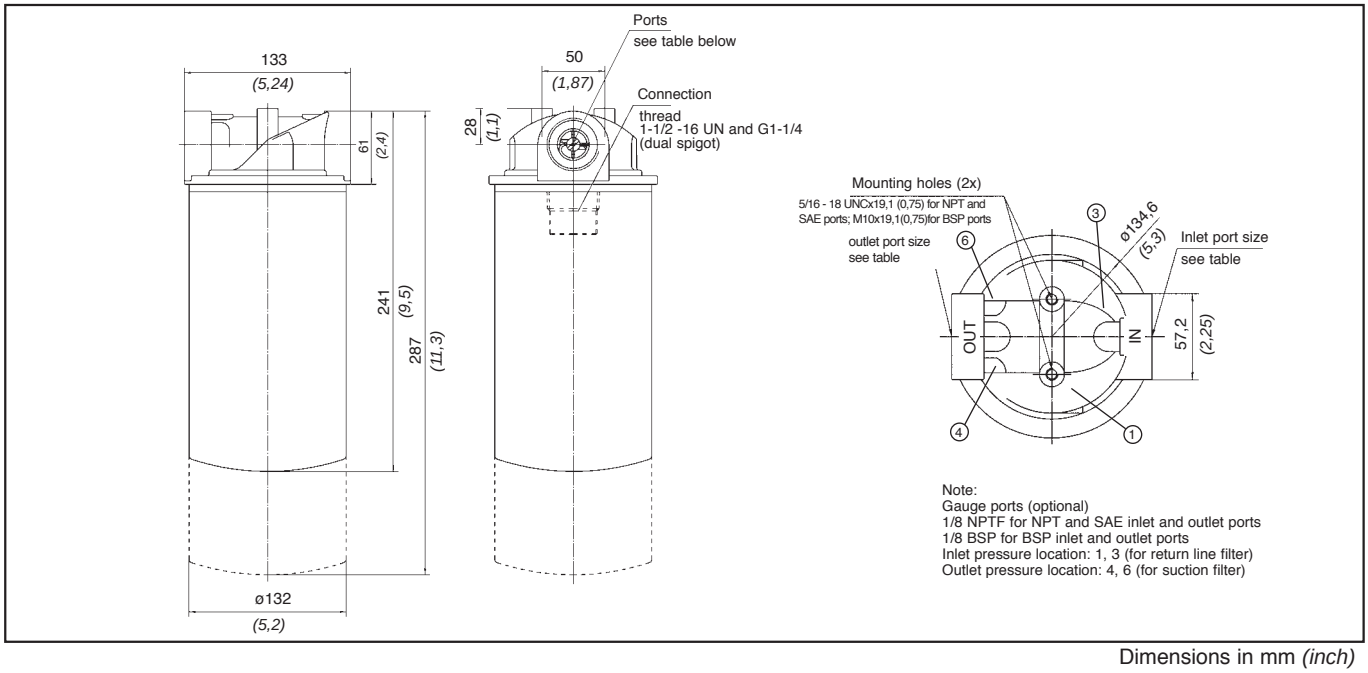

Dimensions in mm *(inch)*

Ordering Code

SSF 120 25 0

Filter type	SSF

Port options		
Code	**Connection Style**	
100	NPT	1 NPT
100B	BSP	G 1
20L	BSP	G1 1/4
120L	NPT	1 1/4 NPT
120	NPT	1 1/4 NPT
130	SAE	1 5/16 -12 UN
160	SAE	1 5/8 -12 UN

Note: SSF-20L and SSF-120L filters use a wide cut or “L” shaped element seal. All others use a thin cut element seal

By-pass options	
Code	**Description**
00	No by-pass
03	0,2 bar *(3 PSI)*
05	0,33 bar *(5 PSI)*
15	1 bar *(15 PSI)*
25	1,7 bar *(25 PSI)*

Indicator port options	
Code	**Description**
0	No indicator port
1	Gauge port drilled-return
2	Gauge port drilled-suction
4	All gauge ports drilled
9	Special

Note: Standard gauge port for BSP connection port is G1/8. Standard gauge port for NPT and SAE connection port is 1/8 NPTF

Spin-On Filters SSF 150, 180

Technical Specification

Construction	Die cast aluminium head
Seals	NBR (Buna-N®)
Port connections	BSP, NPT, or SAE “O”-Ring thread
Flow rate	300 l/min *(80 US GPM)* for return line, 113 l/min *(30 US GPM)* for suction line applications
Working pressure	14 bar *(200 PSI)* working pressure, maximum pressure differential of 5,5 bar *(80 PSI)* for any application with no by-pass valve
Operating temperature	-32°C to +100°C *(-25°F to 212°F)*
By-pass valve	Built into the head
Clogging indicators	Gauge indicator with colored segments Electrical 0.35...2.5 bar *(5...35 PSI)* adjustable see page 22
Elements	For use with SF6700 series elements For element types and flow characteristics see pages 15...18
Media	Mineral oils, other fluids on request

Dimensions

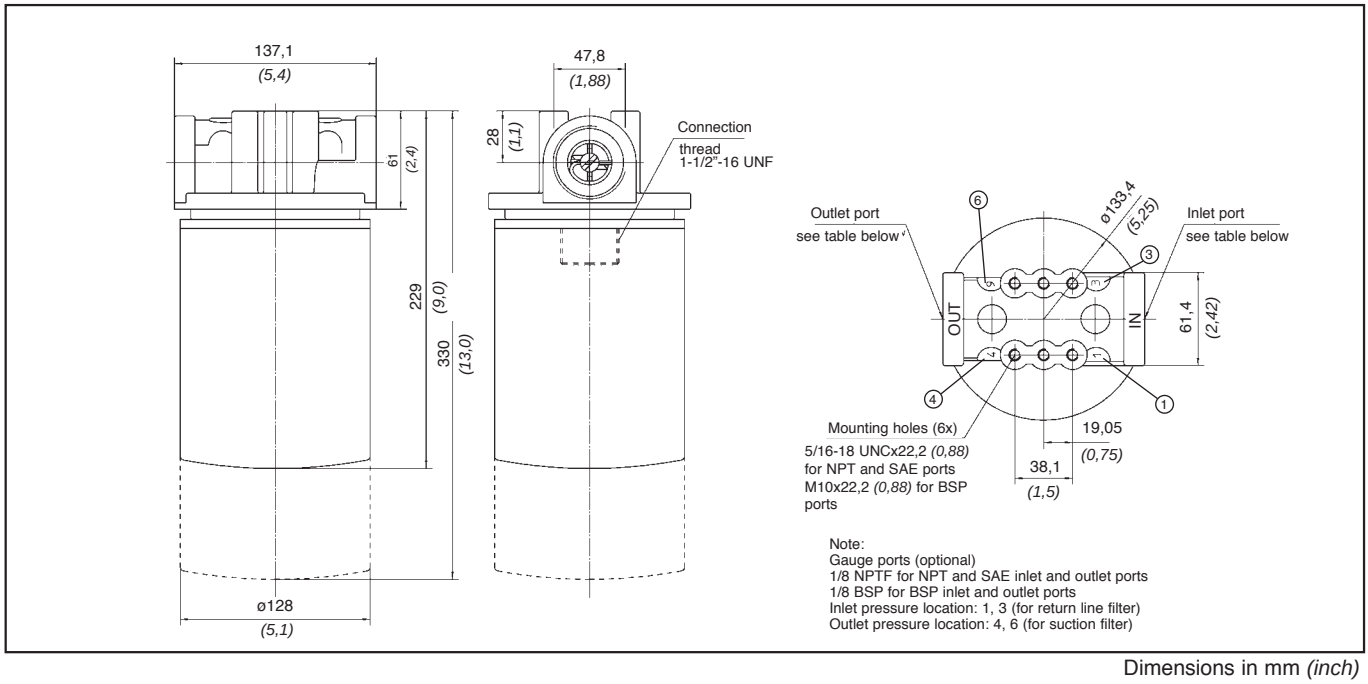

Dimensions in mm *(inch)*

Ordering Code

SSF 150 25 0

Filter type	SSF

Port options		
Code	**Connection Style**	
150	NPT	1 1/2 NPT
150B	BSP	G1 1/2
180	SAE	1 7/8-12 UN

Note: SSF 150, 150B and 180 filters use a wide cut or “L” shaped element seal.

By-pass options	
Code	**Description**
00	No by-pass
03	0,2 bar *(3 PSI)*
05	0,33 bar *(5 PSI)*
15	1 bar *(15 PSI)*
25	1,7 bar *(25 PSI)*

Indicator port options	
Code	**Description**
0	No indicator port
1	Gauge port drilled-return
2	Gauge port drilled-suction
4	All gauge ports drilled
9	Special

Note: Standard gauge port for BSP connection port is G1/8. Standard gauge port for NPT and SAE connection port is 1/8 NPTF

Spin-On Filters SSF 24, 25

Technical Specification

Construction	Die cast aluminium head
Seals	NBR (Buna-N®)
Port connections	BSP, NPT, or SAE flange
Flow rate	454 l/min *(120 US GPM)* for return line, 132 l/min *(35 US GPM)* for suction line applications
Working pressure	12 bar *(174 PSI)* working pressure, maximum pressure differential of 5,5 bar *(80 PSI)* for any application with no by-pass valve
Operating temperature	-30°C to +100°C *(-22°F to 212°F)*
By-pass valve	Built into the head
Clogging indicators	Gauge indicator with colored segments Electrical 0.35...2.5 bar *(5...35 PSI)* adjustable See page 22
Elements	For use with SF6700 and SFC57/58 series elements For element types and flow characteristics see pages 15..18 for SF6700 see pages 20...21 for SFC57/58
Media	Mineral oils, other fluids on request

Dimensions SSF 24

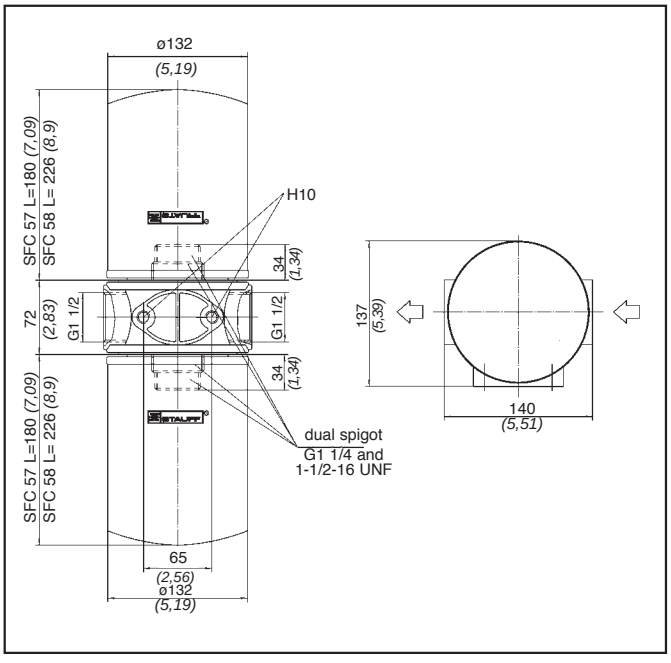

Dimensions SSF 25

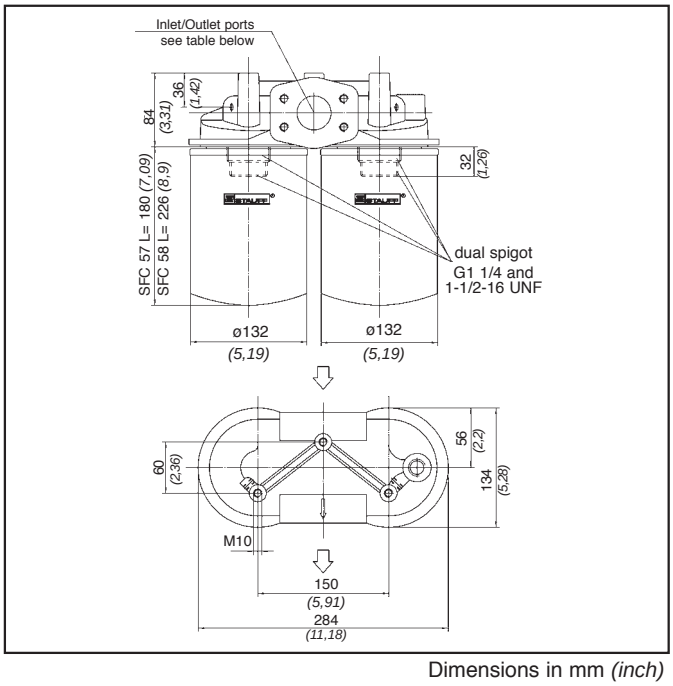

Dimensions in mm *(inch)*

Ordering Code

SSF 24N 25 0

Filter type	SSF

Port options

Code	Connection Style	
24B	BSP	G1 ½
24N	NPT	1 ½ NPT
24S	SAE	1⅞-12 UN
25	NPT&SAE Flange	1½ NPT & 2" SAE Code 61 Flange
25B	BSP&SAE Flange	G1 ¼ & 1 ½" SAE Code 61 Flange

Note: SSF-24 and SSF-25 filters use a wide cut or "L" shaped element seal.

By-pass options

Code	Description
00	No by-pass
03	0,2 bar *(3 PSI)*
05	0,33 bar *(5 PSI)*
15	1 bar *(15 PSI)*
25	1,7 bar *(25 PSI)*

Indicator port options

Code	Description
0	No indicator port
1	Gauge port drilled-return
2	Gauge port drilled-suction
4	All gauge ports drilled
9	Special

Note: Standard gauge port for BSP connection port is G1/8. Standard gauge port for NPT and SAE connection port is 1/8 NPTF

Tank Top Spin-On Filters SSFT 12

Technical Specification

Construction	Die cast aluminium head
Seals	NBR (Buna-N®)
Port connections	BSP and NPT
Flow rate	75 l/min *(20 US GPM)*
Working pressure	7 bar *(100 PSI)* working pressure
Operating temperature	-30°C to +100°C *(-22°F to 212°F)*
By-pass valve	1 bar *(15 PSI)* by-pass in filter element
Clogging indicators	Gauge indicator with colored segments Electrical 0.35...2.5 bar *(5...35 PSI)* adjustable see page 22
Elements	For use with SFT35/36 series elements For element types and flow characteristics see pages 19...21
Media	Mineral oils, other fluids on request

Dimensions

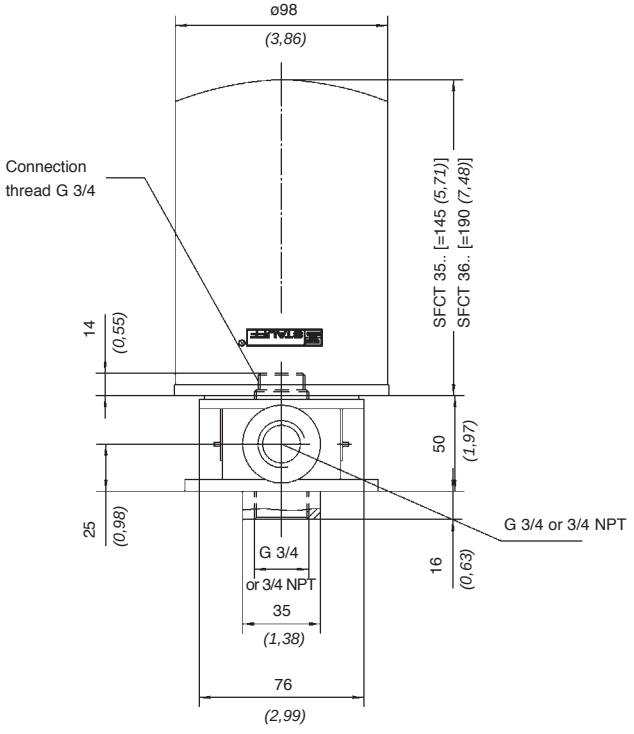

Dimensions in mm *(inch)*

Ordering Code

SSFT 12 1

Filter type	SSFT

Port options		
Code	Connection Style	
12B	BSP	G 3/4
12	NPT	3/4 NPT

Indicator port options	
Code	Description
0	No indicator port
1	Gauge port drilled-return
9	Special

Note: Standard gauge port for BSP connection port is G1/8. Standard gauge port for NPT and SAE connection port is 1/8 NPTF

Tank Top Spin-On Filters SSFT 20

Technical Specification

Construction	Die cast aluminium head
Seals	NBR (Buna-N®)
Port connections	BSP and NPT
Flow rate	200 l/min *(53 US GPM)*
Working pressure	7 bar *(100 PSI)* working pressure
Operating temperature	-30°C to +100°C *(-22°F to 212°F)*
By-pass valve	1 bar *(15 PSI)* by-pass in filter element
Clogging indicators	Gauge indicator with colored segments Electrical 0.35...2.5 bar *(5...35 PSI)* adjustable see page 22
Elements	For use with SFT57/58 series elements For element types and flow characteristics see pages 20...21
Media	Mineral oils, other fluids on request

Dimensions

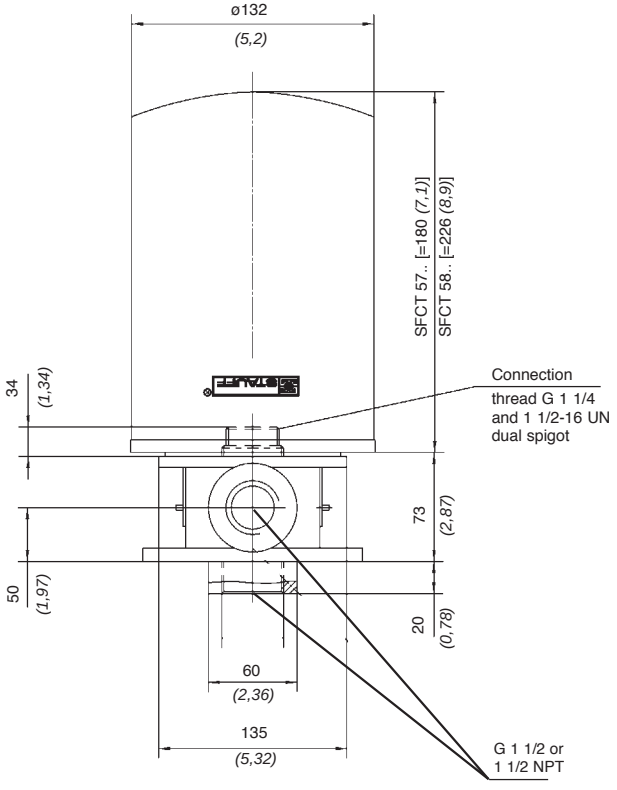

Dimensions in mm *(inch)*

Ordering Code

SSFT 20 1

Filter type	SSFT

Port options		
Code	**Connection Style**	
20B	BSP	G 1 ½
20	NPT	1 ½ NPT

Indicator port options	
Code	**Description**
0	No indicator port
1	Gauge port drilled-return
9	Special

Note: Standard gauge port for BSP connection port is G1/8. Standard gauge port for NPT and SAE connection port is 1/8 NPTF

Spin-On Elements SF6300 Series

Technical Specification

Stauff SF6300 series spin-on elements are used with the Stauff SLF spin on filters.

Seals	NBR (Buna-N®)
Working pressure	14 bar *(200 PSI)* working pressure, maximum pressure differential of 5,5 bar *(80 PSI)* for any application with no by-pass valve
Operating temperature	-32°C to +100°C *(-25°F to 212°F)*
By-pass valve	Built into the element
Media	Mineral oils, other fluids on request

Dimensions and Ordering Code

	Paper	
	SF 6310-18	**SF 6325-10**
	10µm	25µm
Diameter	77,47 *(3,05)*	77,47 *(3,05)*
Length	88,65 *(3,49)*	88,65 *(3,49)*
Element Thread	3/4-16 UNF	3/4-16 UNF
Beta Ratio	ß10 ≥ 2	ß25 ≥ 2
Dirt Holding ACFTD (g)	6	6
Filtration Area	825,2 cm² *(127,9 in²)*	825,2 cm² *(127,9 in²)*
By-pass setting	1,24 bar *(18 PSI)*	0,7 bar *(10 PSI)*
Maximum Working Pressure	14 bar *(200 PSI)*	14 bar *(200 PSI)*
Carton Quantity	12	12
Carton Weight	3,6 kg *(8 lb)*	3,6 kg *(8 lb)*

Flow Characteristics

The following characteristics are valid for mineral oils with a density of 0,85 kg/dm³ and the kinematic viscosity of 30 mm²/s. The characteristics have been determined in accordance to ISO 3968.

Average pressure drop through a clean filter assembly.

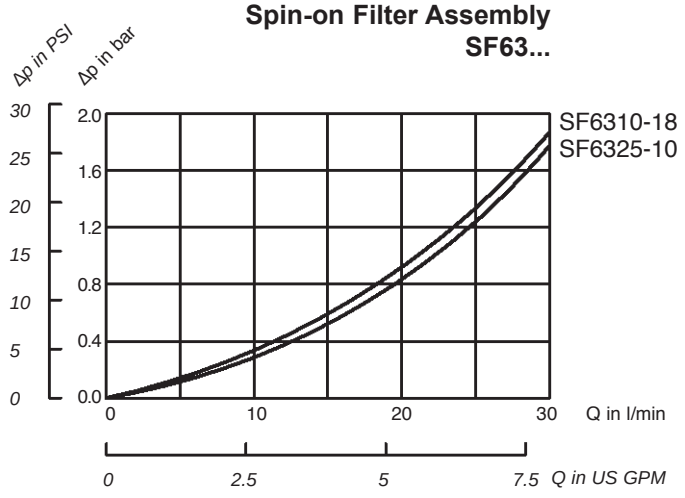

Spin-On Elements SF6500 Series

Stauff SF6500 series spin-on elements are used with the Stauff SAF series spin on filters.

Technical Specification

Seals	NBR (Buna-N®) seals
Working pressure	14 bar *(200 PSI)* working pressure,maximum pressure differential of 5.5 bar *(80 PSI)* for any application with no bypass valve
Operating temperature	-32°C to 100°C (-25°F to 212°F)
Media	Mineral oils, other fluids on request

Dimensions and Ordering Code

	Paper				Microglass			Water Absorbing
	SF 6520	**SF 6521**	**SF 6510**	**SF 6511**	**SF 6549**	**SF 6505**	**SF 6504**	**SF 6520-W**
	10µm	**10µm**	**25µm**	**25µm**	**3µm**	**10µm**	**25µm**	**10µm water absorb**
Diameter	93.2 *(3.67)*	93.2 *(3.67)*	93.2 *(3.67)*	93.2 *(3.67)*	93.2 *(3.67)*	93.2 *(3.67)*	93.2 *(3.67)*	93.2 *(36.7)*
Length	146.3 *(5.76)*	203.2 *(8.00)*	146.3 *(5.76)*	203.2 *(8.00)*	146.3 *(5.76)*	146.3 *(5.76)*	146.3 *(5.76)*	133 *(5.25)*
Element Thread	1-12 UNF	1-12 UNF	1-12 UNF	1-12 UNF	1-12 UNF	1-12 UNF	1-12 UNF	1-12 UNF
Beta Ratio	ß10 ≥ 2	ß10 ≥ 2	ß25 ≥ 2	ß25 ≥ 2	ß3 ≥ 75	ß12 ≥ 75	ß25 ≥ 75	ß10 ≥ 2
Dirt Holding Capacity ACFTD (g)	14.4	22	20.4	31.2	19	11	26	Water holding capacity 162 ml (5.5 oz)
Filtration Area	2303 cm^2 *(357.5 in^2)*	3881 cm^2 *(601.7 in^2)*	2212 cm^2 *(342.9 in^2)*	3388 cm^2 *(525.1 in^2)*	2519 cm^2 *(390.4 in^2)*	2405 cm^2 *(372.7 in^2)*	2405 cm^2 *(372.7 in^2)*	1225 cm^2 *(190 in^2)*
Maximum Working Pressure	14 bar *(200 PSI)*	14 bar *(200 PSI)*	14 bar *(200 PSI)*	14 bar *(200 PSI)*	14 bar *(200 PSI)*	14 bar *(200 PSI)*	14 bar *(200 PSI)*	6.9 bar *(100 PSI)*
Carton Quantity	12	12	12	12	12	12	12	12
Carton Weight	6.3 kg *(13.9 lb)*	8.4 kg *(18.5 lb)*	6.4 kg *(14.2 lb)*	8.8 kg *(19.4 lb)*	8.6 kg *(19 lb)*	8.6 kg *(19 lb)*	8.6 kg *(19 lb)*	8.6 kg *(19 lb)*

Flow Characteristics

The following characteristics are valid for mineral oils with a density of 0,85 kg/dm³ and the kinematic viscosity of 30 mm²/s. The characteristics have been determined in accordance to ISO 3968.

Spin-on Filterhead SAF-05/06

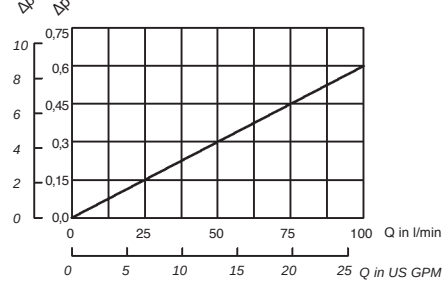

Spin-on Filterhead SAF-07/11

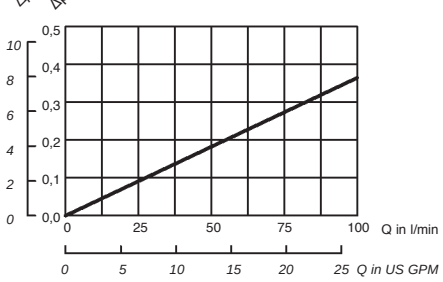

Spin-on Filterhead SAF-10/13

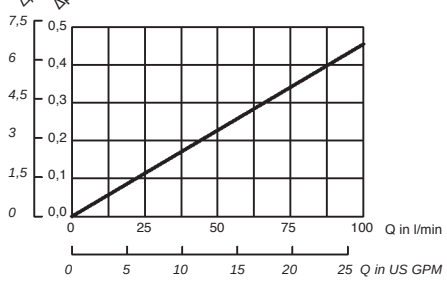

Spin-on Filterelement SF6520

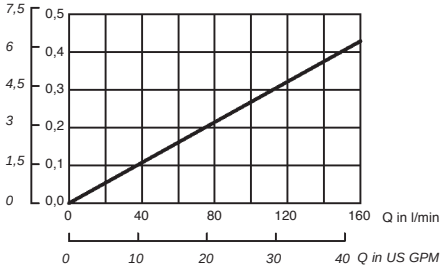

Spin-on Filterelement SF6521

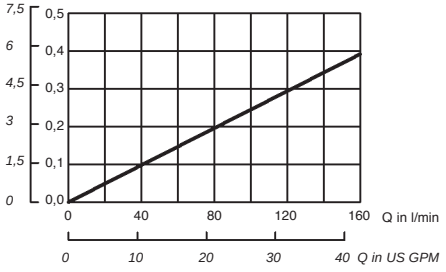

Spin-on Filterelement SF6510

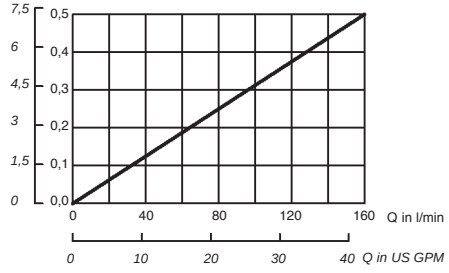

Spin-on Filterelement SF6511

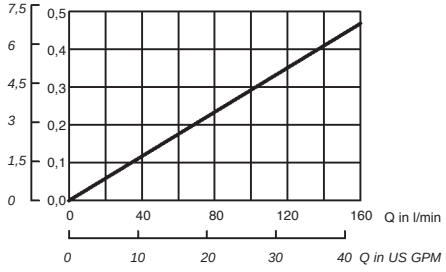

Spin-on Filterelement SF6549

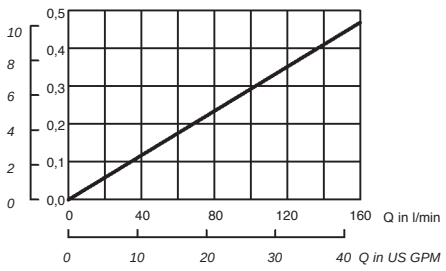

Spin-on Filterelement SF6504

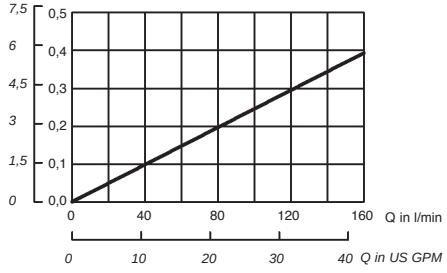

Spin-on Filterelement SF6505

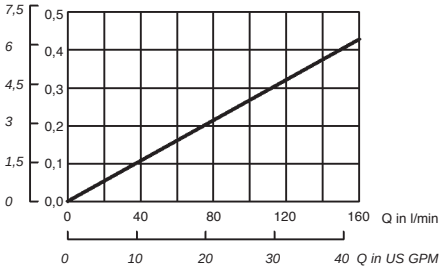

Spin-On Elements SF6700 Series

Technical Specification

Stauff SF6700 series spin-on elements are used with the Stauff SSF 20, 24, 25, 100, 120, 130, 160, 150, and 180, series spin on filters.

Seals	NBR (Buna-N®)
Working pressure	14 bar *(200 PSI)* working pressure, maximum pressure differential of 5,5 bar *(80 PSI)* for any application with no by-pass valve
Operating temperature	-32°C to +100°C *(-25°F to 212°F)*
Media	Mineral oils, other fluids on request

Dimensions and Ordering Code

	Microglass								
	SF 6702-MG	SF 6703-MG	SF 6704-MG	SF 6706-MG	SF 66707-MG	SF 6730-MG	SF 6731-MG	SF 6728-MG	SF 6726-MG
	1µm	3µm	3µm	6µm	6µm	12µm	12µm	25µm	25µm
Diameter	128 *(5,06)*	128 *(5,06)*	128 *(5,06)*	128 *(5,06)*	128 *(5,06)*	128 *(5,06)*	128 *(5,06)*	128 *(5,06)*	128 *(5,06)*
Length	270 *(10,63)*	168 *(6,63)*	270 *(10,63)*	168 *(6,63)*	270 *(10,63)*	168 *(6,63)*	270 *(10,63)*	168 *(6,63)*	270 *(10,63)*
Element Thread	1½-16 UNF	1½-16 UNF	1½-16 UNF	1½-16 UNF	1½-16 UNF	1½-16 UNF	1½-16 UNF	1½-16 UNF	1½-16 UNF
Beta Ratio	ß1 ≥ 200	ß3 ≥ 200	ß3 ≥ 200	ß6 ≥ 200	ß6 ≥ 200	ß12 ≥ 200	ß12 ≥ 200	ß25 ≥ 200	ß25 ≥ 200
Dirt Holding Capacity ACFTD (g)	30	31	47	35	54	38	59	50	76
Filtration Area	8167 cm² *(1266 in²)*	4051 cm² *(628 in²)*	8167 cm² *(1266 in²)*	4051 cm² *(628 in²)*	7200 cm² *(1116 in²)*	4051 cm² *(628 in²)*	7522 cm² *(1166 in²)*	4051 cm² *(628 in²)*	8167 cm² *(1266 in²)*
Maximum Working Pressure	14 bar *(200 PSI)*	14 bar *(200 PSI)*	14 bar *(200 PSI)*	14 bar *(200 PSI)*	14 bar *(200 PSI)*	14 bar *(200 PSI)*	14 bar *(200 PSI)*	14 bar *(200 PSI)*	14 bar *(200 PSI)*
Carton Quantity	6	6	6	6	6	6	6	6	6
Carton Weight	11,8 kg *(26,1 lb)*	8,2 kg *(18 lb)*	11,8 kg *(26,1 lb)*	8,2 kg *(18 lb)*	11,8 kg *(26,1 lb)*	8,2 kg *(18 lb)*	11,8 kg *(26,1 lb)*	8,2 kg *(18 lb)*	11,8 kg *(26,1 lb)*

NEXT

STAUFF®

Spin-On Elements SF6700 Series

	Paper				Stainless Wire Mesh		Water Absorbing
	SF 6720	SF 6721	SF 6710	SF 6711	SF 6790	SF 6791	SF 6721-W
	10µm	10µm	25µm	25µm	125µm	125µm	10µm water absorb
Diameter	128 *(5,06)*	128 *(5,06)*	128 *(5,06)*	128 *(5,06)*	128 *(5,06)*	128 *(5,06)*	128 *(5,06)*
Length	168 *(6,63)*	270 *(10,63)*	168 *(6,63)*	270 *(10,63)*	168 *(6,63)*	270 *(10,63)*	270 *(10,63)*
Element Thread	1½ -16 UNF	1½ -16 UNF	1½ -16 UNF	1½ -16 UNF	1½ -16 UNF	1½ -16 UNF	1½ -16 UNF
Beta Ratio	ß10 ≥ 2	ß10 ≥ 2	ß25 ≥ 2	ß25 ≥ 2	n/a	n/a	ß10 ≥ 2
Dirt Holding Capacity ACFTD (g)	34	62	34	62	n/a	n/a	Water holding capacity 444 ml *(15 oz)*
Filtration Area	3677 cm^2 *(570 in^2)*	6813 cm^2 *(1056 in^2)*	3677 cm^2 *(570 in^2)*	6813 cm^2 *(1056 in^2)*	1290 cm^2 *(200 in^2)*	2032 cm^2 *(315 in^2)*	4440 cm^2 *(688 in^2)*
Maximum Working Pressure	14 bar *(200 PSI)*	14 bar *(200 PSI)*	14 bar *(200 PSI)*	14 bar *(200 PSI)*	14 bar *(200 PSI)*	14 bar *(200 PSI)*	14 bar *(200 PSI)*
Carton Quantity	6	6	6	6	6	6	6
Carton Weight	6,6 kg *(14,6 lb)*	7,9 kg *(17.5 lb)*	6,7 kg *(14.9 lb)*	9,3 kg *(20,6 lb)*	8,2 kg *(18 lb)*	11,8 kg *(26,1 lb)*	11,8 kg *(26,1 lb)*

Flow Characteristics

The following characteristics are valid for mineral oils with a density of 0,85 kg/dm³ and the kinematic viscosity of 30 mm²/s. The characteristics have been determined in accordance to ISO 3968.

Spin-on Filter Head SSF 20/100/120/130/160

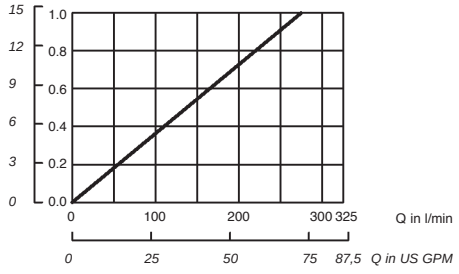

Spin-on Filter Head SSF 150/180

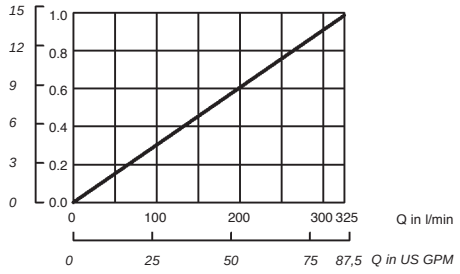

Spin-on Filter Head SSF 24/25

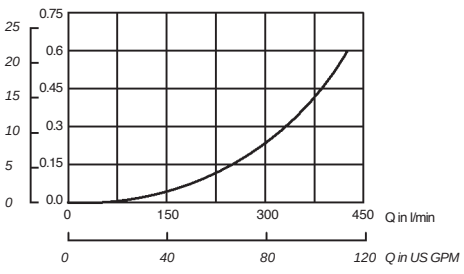

Spin-on Filter Element SF6702-MG

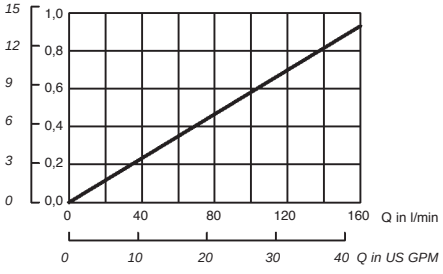

Spin-on Filter Element SF6703-MG

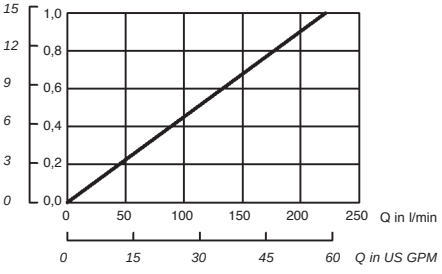

Spin-on Filter Element 6704-MG

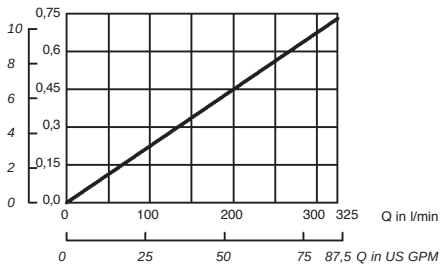

Spin-on Filter Element SF6706-MG

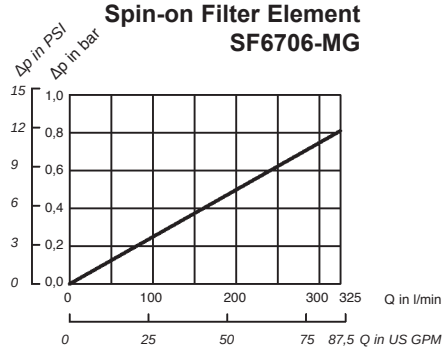

Spin-on Filter Element SF6707-MG

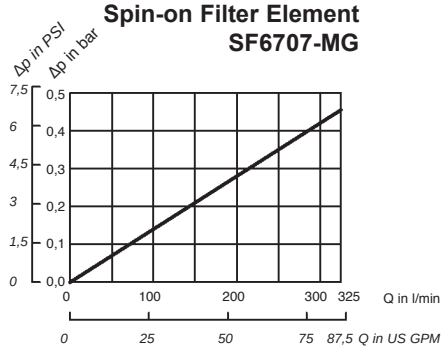

Spin-on Filter Element 6730-MG

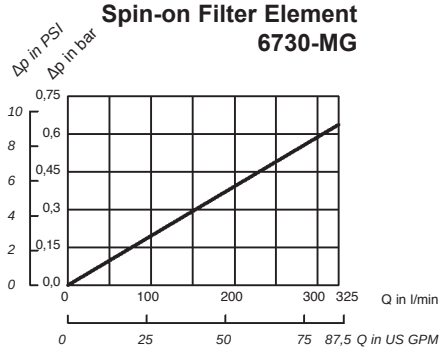

Spin-on Filter Element SF6731-MG

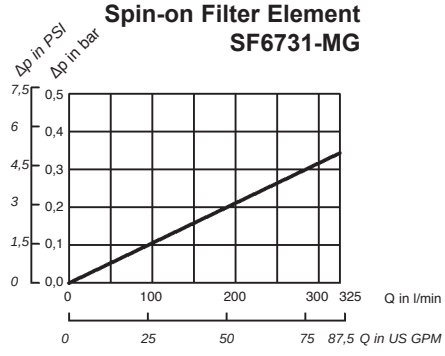

Spin-on Filter Element SF6728-MG

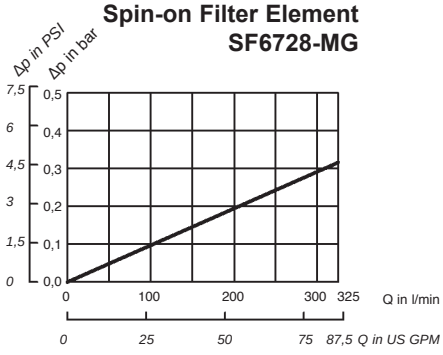

Spin-on Filter Element SF6726-MG

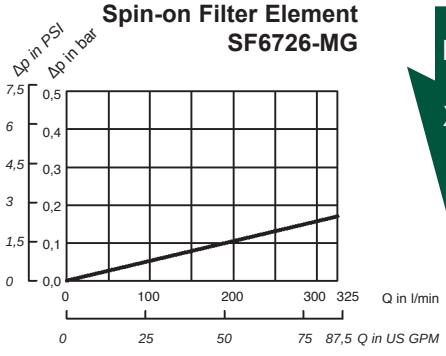

NEXT

Flow Characteristics

The following characteristics are valid for mineral oils with a density of 0,85 kg/dm³ and the kinematic viscosity of 30 mm²/s. The characteristics have been determined in accordance to ISO 3968.

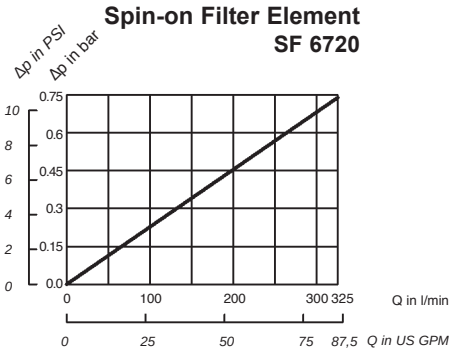

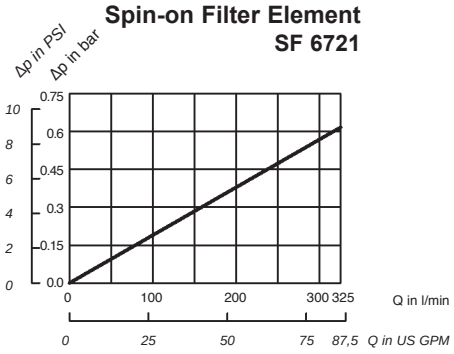

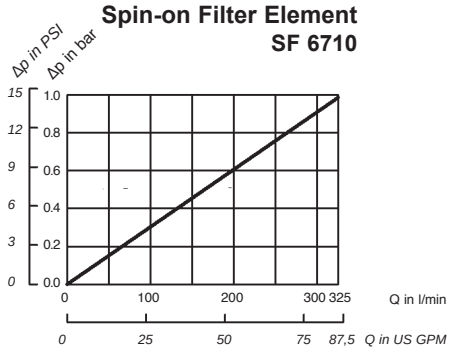

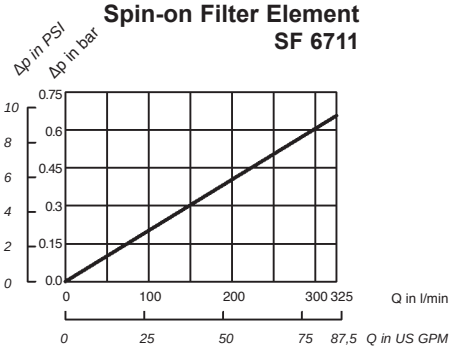

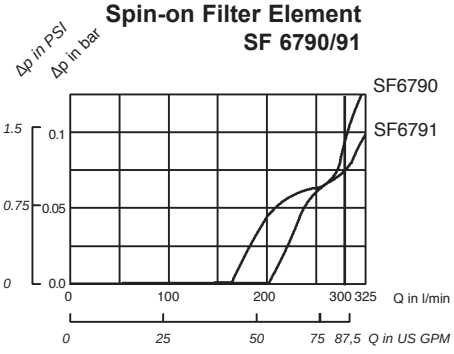

Spin-On Elements SFC 35, 36, SFCT 35, 36 Series

Stauff SF35 and SFC36 series spin-on elements are used with the Stauff SSF12 series spin on filters with G 3/4 threaded posts.

Stauff SFCT 35 and SFCT 36 series spin-on elements have an internal 1 bar *(15 PSI)* by-pass and anti-drain back diaphragm for use with Stauff SSFT 12 tank top spin-on filters.

Technical Specification

Seals	NBR (Buna-N®) seals
Working pressure	12 bar *(174 PSI)* working pressure, maximum pressure differential of 5,5 bar *(80 PSI)* for any application with no by-pass valve
Operating temperature	-32°C to +100°C *(-25°F to 212°F)*
Media	Mineral oils, other fluids on request

Dimensions and Ordering Code

	Paper				Microglass		Wire Mesh		Brass Mesh	
	SFC 3510E SFCT 3510E	SFC 3610E SFCT 3610E	SFC 3525E SFCT 3525E	SFC 3625E SFCT 3625E	SFC 3510AE SFCT 3510AE	SFC 3610AE SFCT 3610AE	SFC 3560E SFCT 3560E	SFC 3660E SFCT 3660E	SFC 35125E SFCT 3512E	SFC 36125E SFCT 3612E
	10µm	10µm	25µm	25µm	10µm	10µm	60µm	60µm	125µm	125µm
Diameter	98 *(3,86)*	98 *(3,86)*	98 *(3,86)*	98 *(3,86)*	98 *(3,86)*	98 *(3,86)*	98 *(3,86)*	98 *(3,86)*	98 *(3,86)*	98 *(3,86)*
Length	145 *(5,7)*	190 *(7,5)*	145 *(5,7)*	190 *(7,5)*	145 *(5,7)*	190 *(7,5)*	145 *(5,7)*	190 *(7,5)*	145 *(5,7)*	190 *(7,5)*
Element Thread	G3/4	G3/4	G3/4	G3/4	G3/4	G3/4	G3/4	G3/4	G3/4	G3/4
Beta Ratio	ß10 ≥ 2	ß10 ≥ 2	ß25 ≥ 2	ß25 ≥ 2	ß10 ≥ 75	ß10 ≥ 75	n/a	n/a	n/a	n/a
By-pass Setting (SFCT Series only)	1 bar *(15 PSI)*	1 bar *(15 PSI)*	1 bar *(15 PSI)*	1 bar *(15 PSI)*	1 bar *(15 PSI)*	1 bar *(15 PSI)*	1 bar *(15 PSI)*	1 bar *(15 PSI)*	1 bar *(15 PSI)*	1 bar *(15 PSI)*
Maximum Working Pressure	12 bar *(174 PSI)*	12 bar *(174 PSI)*	12 bar *(174 PSI)*	12 bar *(174 PSI)*	12 bar *(174 PSI)*	12 bar *(174 PSI)*	12 bar *(174 PSI)*	12 bar *(174 PSI)*	12 bar *(174 PSI)*	12 bar *(174 PSI)*
Carton Quantity	1	1	1	1	1	1	1	1	1	1
Carton Weight	0,9 kg *(2 lb)*	1,3 kg *(2,6 lb)*	0,9 kg *(2 lb)*	1,3 kg *(2,6 lb)*	0,9 kg *(2 lb)*	1,3 kg *(2,6 lb)*	0,9 kg *(2 lb)*	1,3 kg *(2,6 lb)*	0,9 kg *(2 lb)*	1,3 kg *(2,6 lb)*

Spin-On Elements SFC 57, 58, SFCT 57, 58 Series

Stauff SFC 57 and SFC 58 series spin-on elements are used with the Stauff SSF20, 24, 25, 100, 120, 130, 160, 150 and 180 series spin on filters with G 1 1/4 threaded posts.

Stauff SFCT 57 and SFCT 58 series spin-on elements have an internal 1 bar *(15 PSI)* by-pass and anti-drain back diaphragm for use with Stauff SSFT 20 tank top spin-on filters.

Technical Specification

Seals	NBR (Buna-N®) seals
Working pressure	12 bar *(174 PSI)* working pressure, maximum pressure differential of 5,5 bar *(80 PSI)* for any application with no by-pass valve
Operating temperature	-32°C to +100°C *(-25°F to 212°F)*
Media	Mineral oils, other fluids on request

Dimensions and Ordering Code

	Paper				Microglass		Wire Mesh		Brass Mesh	
	SFC 5710E SFCT 5710E	SFC 5810E SFCT 5810E	SFC 5725E SFCT 5725E	SFC 5825E SFCT 5825E	SFC 5710AE SFCT 5710AE	SFC 5810AE SFCT 5810AE	SFC 5760E SFCT 5760E	SFC 5860E SFCT 5860E	SFC 57125E SFCT 57125E	SFC 58125E SFCT 58125E
	10µm	10µm	25µm	25µm	10µm	10µm	60µm	60µm	125µm	125µm
Diameter	132 *(5,2)*	132 *(5,2)*	132 *(5,2)*	132 *(5,2)*	132 *(5,2)*	132 *(5,2)*	132 *(5,2)*	132 *(5,2)*	132 *(5,2)*	132 *(5,2)*
Length	180 *(7,1)*	226 *(8,9)*	180 *(7,1)*	226 *(8,9)*	180 *(7,1)*	226 *(8,9)*	180 *(7,1)*	226 *(8,9)*	180 *(7,1)*	226 *(8,9)*
Element Thread	G 1 1/4	G 1 1/4	G 1 1/4	G 1 1/4	G 1 1/4	G 1 1/4	G 1 1/4	G 1 1/4	G 1 1/4	G 1 1/4
Beta Ratio	ß10 ≥ 2	ß10 ≥ 2	ß25 ≥ 2	ß25 ≥ 2	ß10 ≥ 75	ß10 ≥ 75	n/a	n/a	n/a	n/a
By-pass Setting (SFCT Series only)	1 bar *(15 PSI)*	1 bar *(15 PSI)*	1 bar *(15 PSI)*	1 bar *(15 PSI)*	1 bar *(15 PSI)*	1 bar *(15 PSI)*	1 bar *(15 PSI)*	1 bar *(15 PSI)*	1 bar *(15 PSI)*	1 bar *(15 PSI)*
Maximum Working Pressure	12 bar *(174 PSI)*	12 bar *(174 PSI)*	12 bar *(174 PSI)*	12 bar *(174 PSI)*	12 bar *(174 PSI)*	12 bar *(174 PSI)*	12 bar *(174 PSI)*	12 bar *(174 PSI)*	12 bar *(174 PSI)*	12 bar *(174 PSI)*
Carton Quantity	1	1	1	1	1	1	1	1	1	1
Carton Weight	1,4 kg *(3 lb)*	1,85 kg *(4 lb)*	1,4 kg *(3 lb)*	1,85 kg *(4 lb)*	1,4 kg *(3 lb)*	1,85 kg *(4 lb)*	0,9 kg *(2 lb)*	1,3 kg *(2,6 lb)*	0,9 kg *(2 lb)*	1,3 kg *(2,6 lb)*

Flow Characteristics

The following characteristics are valid for mineral oils with a density of 0,85 kg/dm³ and the kinematic viscosity of 30 mm²/s. The characteristics have been determined in accordance to ISO 3968.

Spin-on Filter Housing SSF12

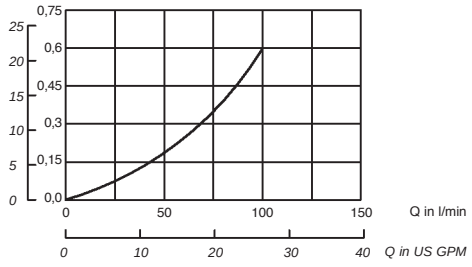

Spin-on Filter Housing SSFT12/20

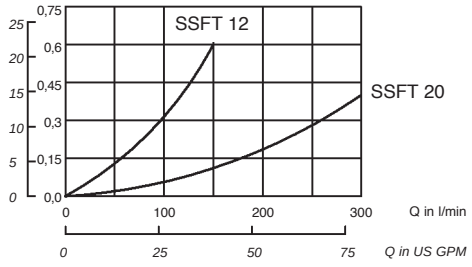

Spin-on Filter Elements SFC/SFCT 35..

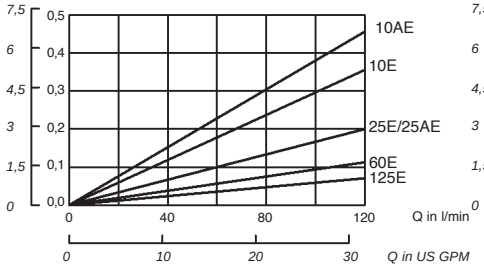

Spin-on Filter Elements SFC/SFCT 36..

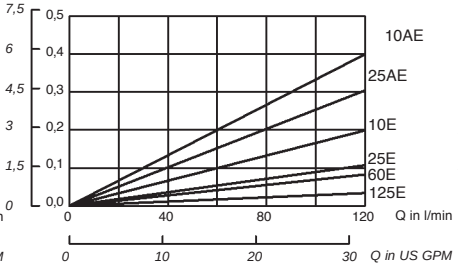

Spin-on Filter Elements SFC/SFCT 57..

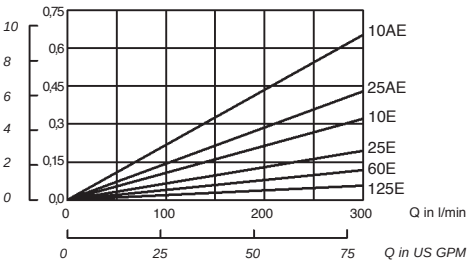

Spin-on Filter Elements SFC/SFCT 58..

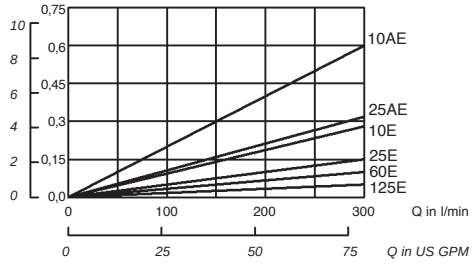

Filter Indicators

Visual Indicators

Type	Thread Type G
GV-5B / GV-10B / G-12B / CI-20B	G 1/8
GV-5 / GV-10 / G-12 / CI-20	1/8 NPTF

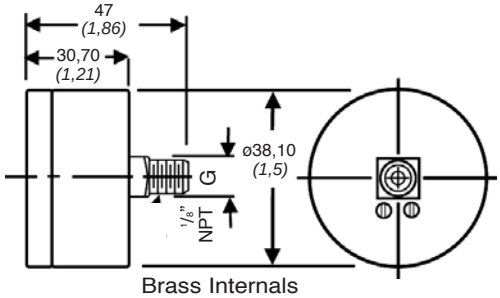

Brass Internals

Vacuum Gauges, Suction Line Applications

GV-5

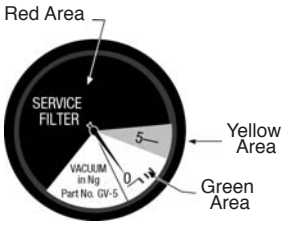

For use with 3PSI filter by-pass valve
0,2 bar *(3 PSI)*

GV-10

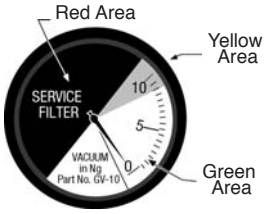

For use with 5PSI filter by-pass valve
0,35 bar *(5 PSI)*

Pressure Gauges, Return Line Applications

CI-12

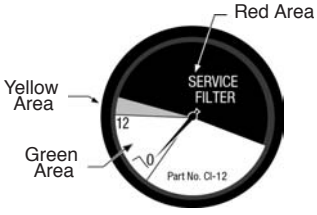

For use with 15PSI filter by-pass valve
1,0 bar *(15 PSI)*

CI-20

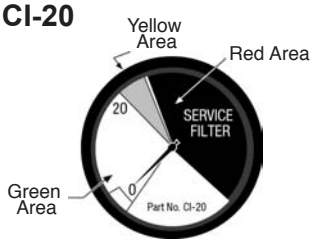

For use with 25PSI filter by-pass valve
1,7 bar *(25 PSI)*

Electrical Indicator

Type	Thread Type
EPS-1B / EVS 1B	G 1/8
EPS-1 / EVS 1	1/8 NPT

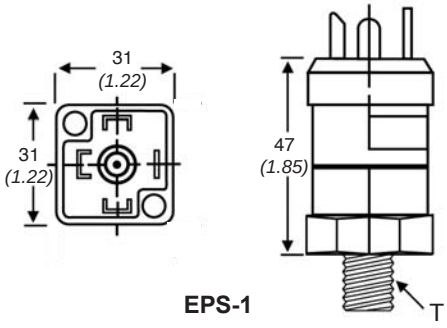

EPS-1

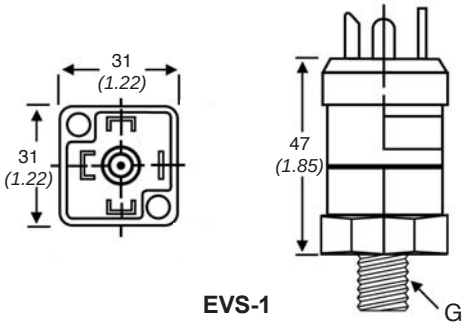

EVS-1

Can Be Field Installed

All dimensions in mm *(inch)*

	EPS-1 (Pressure)	EVS-1 (Vacuum)
Electrical	7Amp 125/250 VAC	7Amp 125/250 VAC
Protection	DIN 43650 IP65	DIN 43650 PIP65
Temperature Range	-40˚C to +80˚C *(-40˚F to 180˚F)* Ambient & Medium	-40˚C to +80˚C *(-40˚F to +180˚F)* Ambient & Medium
Diaphragm Material	Epichlorohydrin Standard	Epichlorohydrin Standard
Housing Material	Zinc Plated Steel Standard	Aluminum AL2024
MAXIMUM OVER Pressure	25 Bar *(350 PSI)* 6:1 Safety Factor	25 Bar *(350 PSI)*
ADJUSTMENT RANGES	0.35/2.5 Bar *(5/35 PSI)*	150/1000 mBar *(5/30 in Hg)*
Dead Band	20%	25%
Maximum Pressure	25 Bar *(350 PSI)*	25 Bar *(350 PSI)*
Welted Area Material	Elastomer & Zinc Plated Steel Brass	Elastomer & Anodized Aluminum 316SS Optional
Weight	Steel Housing 0.11 Kg *(0.23 lb)*	0.25 Kg *(0.50 lbs.)*
Repeatability	±2% at 20˚C *(70˚F)* Ambient Temperature	±2% at 20˚C *(70˚F)* Ambient Temperature
Hirschmann Connector With Strain Relief		

Spin-On Filters Quick Reference Guide

Spin-On Filter Heads									Spin-OnFilter Element						
Type	Size	Port	Post	Max. Flow Rate*		Catalog Page	Seal		SF 63XX	SF 65XX	SF 67XX	SFC 35XX SFC 36XX	SFC 57XX SFC 58XX	SFCT 35XX SFCT 36XX	SFCT 57XX SFCT 58XX
				l/min	US GPM		Thin	Wide							
SLF	02B	G1/4	3/4 -16 UNF	19	5	3			12						
SLF	02	1/4 NPT	3/4 -16 UNF	19	5	3			12						
SLF	03B	G 3/8	3/4 -16 UNF	19	7	3			12						
SLF	03	3/8 NPT	3/4 -16 UNF	26	7	3			12						
SLF	04	9/16-18UNF , #6 SAE	3/4 -16 UNF	26	7	3			12						
SAF	05B	G1/2	1 - 12 UNF		15	4									
SAF	05	1/2 NPT	1 - 12 UNF	60	15	4				13-14					
SAF	06	3/4 -16 UN , #8 SAE	1 - 12 UNF	60	15	4				13-14					
SAF	07B	G 3/4	1 - 12 UNF	90	25	4				13-14					
SAF	07	3/4 NPT	1 - 12 UNF	90	25	4				13-14					
SAF	11	1 1/16 -12 UN , #12 SAE	1 - 12 UNF	90	25	4				13-14					
SAF	10B	G1	1 - 12 UNF	128	34	5				13-14					
SAF	10	1 NPT	1 - 12 UNF	128	34	5				13-14					
SAF	13	1 5/16 -12 UN , #16 SAE	1 - 12 UNF	128	34	5				13-14					
SSF	12	G 3/4	G 3/4	90	25	6						19-21			
SSF	12N	3/4 NPT	G 3/4	90	25	6						19-21			
SSF	100B	G1	G 1 1/4 + 1 1/2 - 16 UNF	170	45	7	X						20-21		
SSF	100	1 NPT	G 1 1/4 + 1 1/2 - 16 UNF	170	45	7	X				15-18		20-21		
SSF	20L	G 1 1/4	G 1 1/4 + 1 1/2 - 16 UNF	225	60	7		X			15-18		20-21		
SSF	120	1 1/4 NPT	G 1 1/4 + 1 1/2 - 16 UNF	225	60	7	X				15-18		20-21		
SSF	120L	1 1/4 NPT	G 1 1/4 + 1 1/2 - 16 UNF	225	60	7		X			15-18		20-21		
SSF	130	1 5/16 -12 SAE , #16 SAE	G 1 1/4 + 1 1/2 - 16 UNF	225	60	7	X				15-18		20-21		
SSF	160	1 5/8 -12 SAE , #20 SAE	G 1 1/4 + 1 1/2 - 16 UNF	225	60	7	X				15-18		20-21		
SSF	150B	G1-1/2	1 1/2 - 16 UNF	300	80	8		X			15-18				
SSF	150	1 1/2 - NPT	1 1/2 - 16 UNF	300	80	8		X			15-18				
SSF	180	1 7/8 - 12 SAE , #24 SAE	1 1/2 - 16 UNF	300	80	8		X			15-18				
SSF	24B	G1-1/2	G 1 1/4 + 1 1/2 - 16 UNF	454	120	9		X			15-18		20-21		
SSF	24N	1 1/2 NPT	G 1 1/4 + 1 1/2 - 16 UNF	454	120	9		X			15-18		20-21		
SSF	24S	1 7/8 - 12 UN, SAE # 24	G 1 1/4 + 1 1/2 - 16 UNF	454	120	9		X			15-18		20-21		
SSF	25B	G1-1/4 and 1-1/2 SAE Flange	G 1 1/4 + 1 1/2 - 16 UNF	454	120	9		X			15-18		20-21		
SSF	25	1 1/2 - NPT and 2 SAE Flange	G 1 1/4 + 1 1/2 - 16 UNF	454	120	9		X			15-18		20-21		
SSFT	12B	G3/4	G3/4	75	20	10								19-21	
SSFT	12	3/4 NPT	G 3/4	75	20	10								19-21	
SSFT	20	G 1 1/2	G 1 1/4 + 1 1/2 - 16 UNF	200	53	11		X							20-21
SSFT	20	1 1/2 NPT	G 1 1/4 + 1 1/2 - 16 UNF	200	53	11		X							20-21

* Note : Reflects nominal flow rate for return line application. Actual flow rate will depend on element selected.

The numbers above reference the page in the catalog